Mountain Valley Pipeline, LLC
Mountain Valley Pipeline Project
FERC Docket No. CP16-10-000

Attachment 64
Site-specific Water Crossing and Restoration Plans

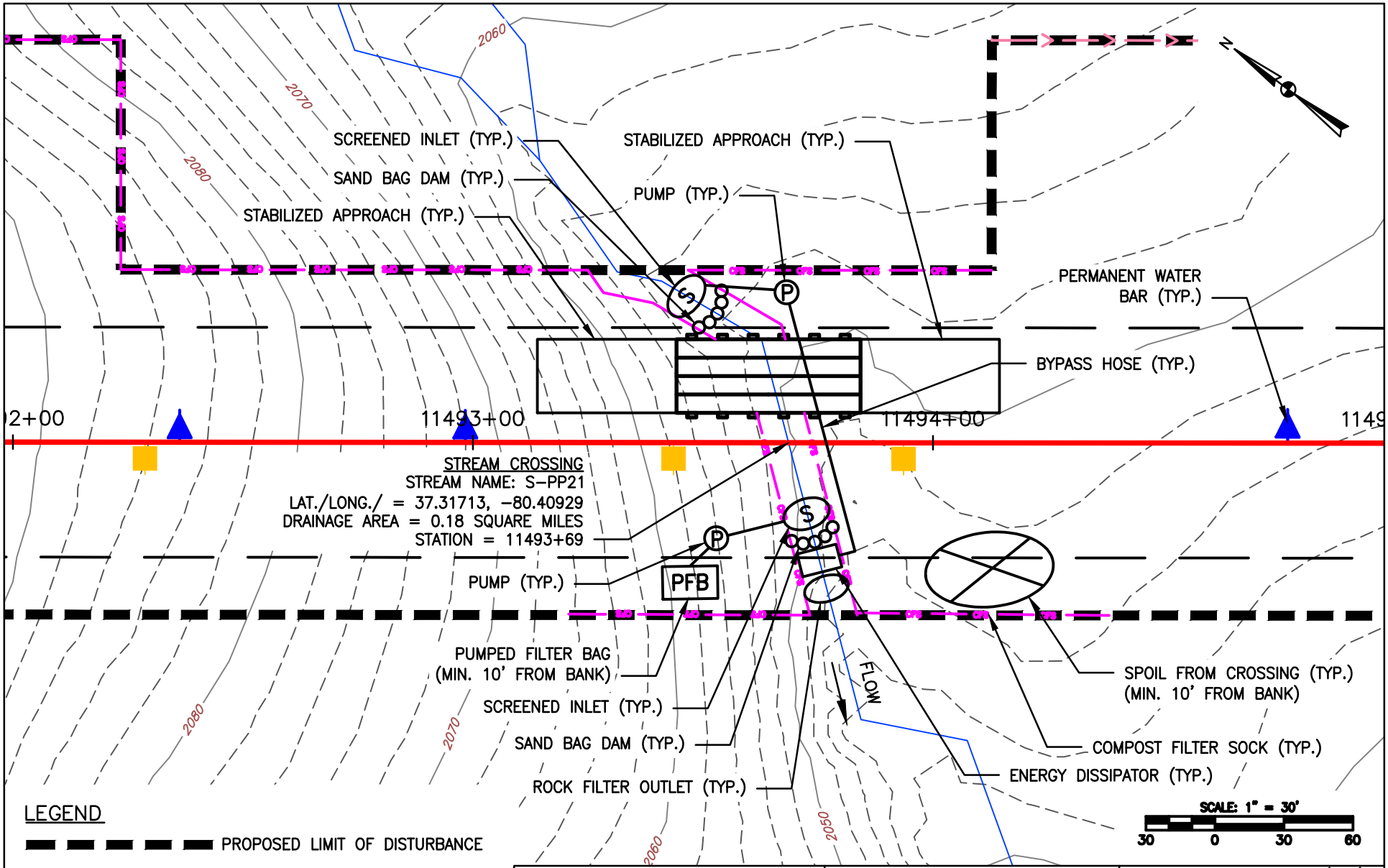

LEGEND

- PROPOSED LIMIT OF DISTURBANCE
- PROPOSED R.O.W.
- PROPOSED PIPELINE
- CFS — PROPOSED COMPOST FILTER SOCK
- TIMBER MAT
- PROPOSED TRENCH BREAKER

TETRA TECH
WWW.TETRATECH.COM
661 ANDERSEN DRIVE – FOSTER PLAZA 7
PITTSBURGH, PA 15220
T: (412) 921-7090 | F: (412) 921-4040

Mountain Valley PIPELINE

MOUNTAIN VALLEY PIPELINE PROJECT

STREAM CROSSING EXHIBIT

STREAM NAME: S-PP21
STATION: 11493+69
COUNTY: MONTGOMERY

DATE:	12/13/16
PROJECT NO.:	112IC07157
DESIGNED BY:	DW
DRAWN BY:	JK
CHECKED BY:	RE
SHEET: 1 OF 2	

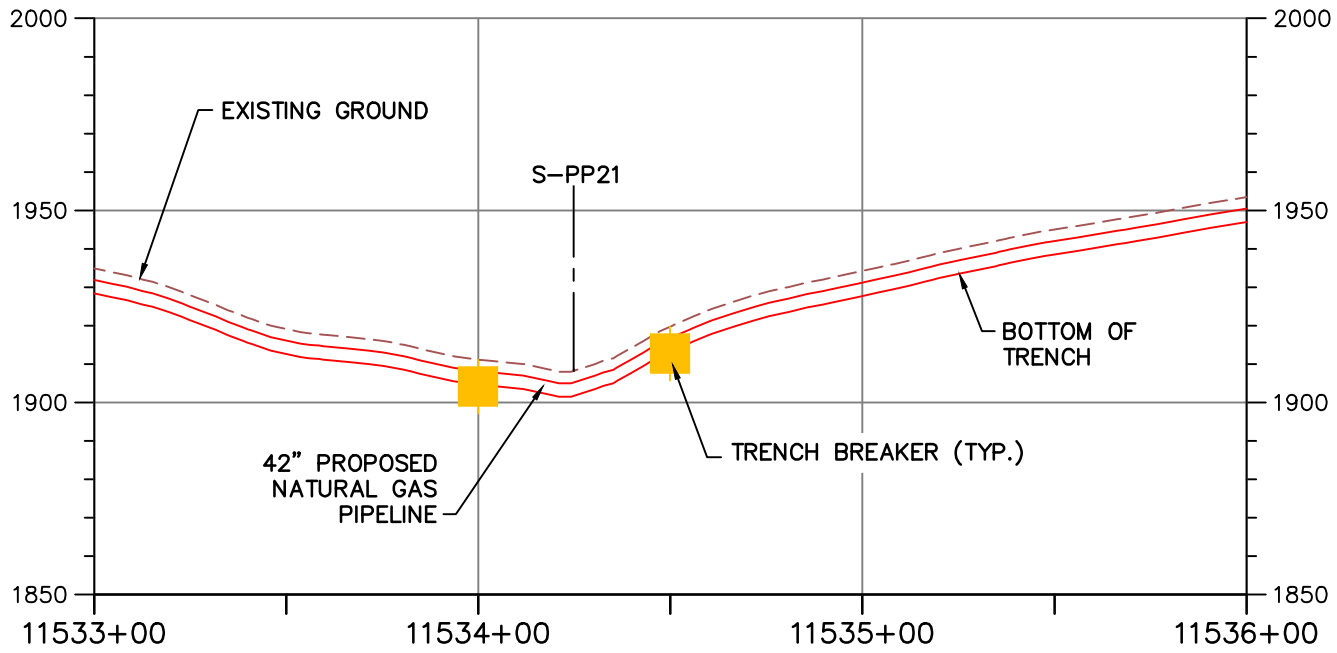

PROFILE VIEW

SCALE: 1" = 50'

50 0 50 100

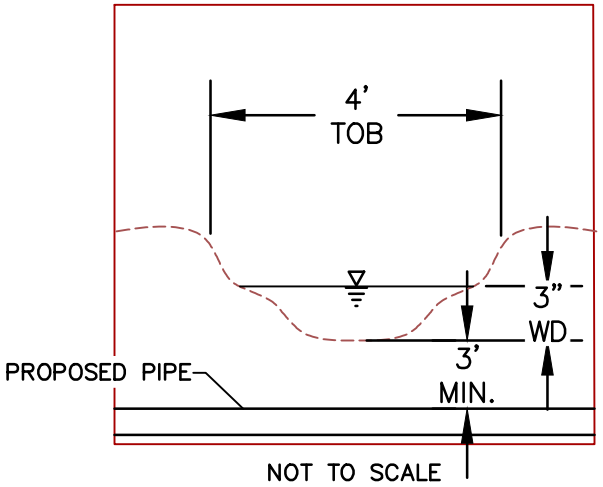

NOTE:
MINIMUM 3' OF COVER BETWEEN STREAM AND BOTTOM OF PIPELINE

TETRA TECH
WWW.TETRATECH.COM
661 ANDERSEN DRIVE – FOSTER PLAZA 7
PITTSBURGH, PA 15220
T: (412) 921–7090 | F: (412) 921–4040

Mountain Valley PIPELINE

MOUNTAIN VALLEY PIPELINE PROJECT

STREAM CROSSING EXHIBIT

STREAM NAME: S–PP21
STATION: 11493+69
COUNTY: MONTGOMERY

DATE:	12/13/16
PROJECT NO.:	112IC07157
DESIGNED BY:	DW
DRAWN BY:	JK
CHECKED BY:	RE
SHEET: 2 OF 2	

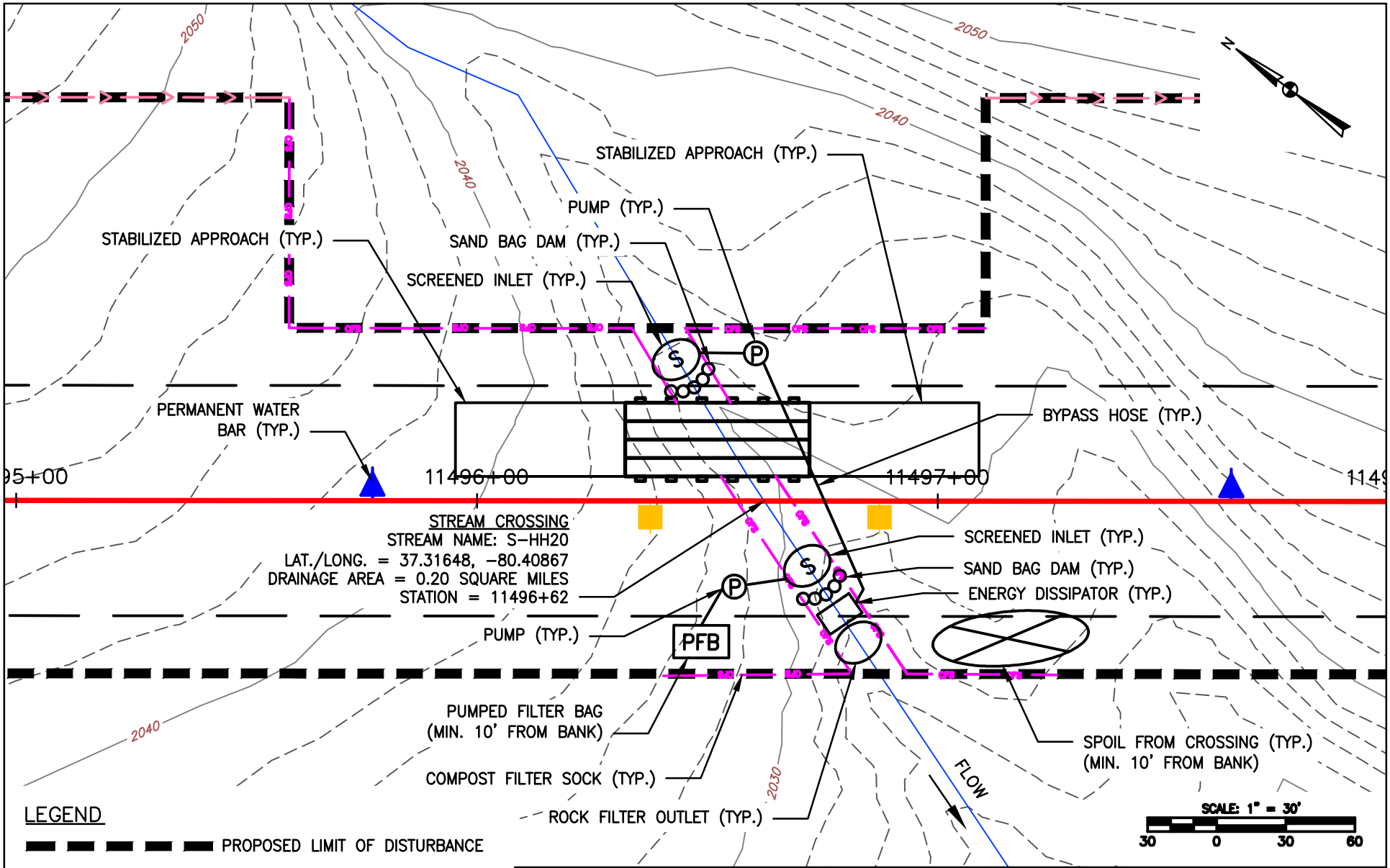

LEGEND

- PROPOSED LIMIT OF DISTURBANCE
- PROPOSED R.O.W.
- PROPOSED PIPELINE
- CFS — PROPOSED COMPOST FILTER SOCK
- TIMBER MAT
- PROPOSED TRENCH BREAKER

TETRA TECH
WWW.TETRATECH.COM
661 ANDERSEN DRIVE – FOSTER PLAZA 7
PITTSBURGH, PA 15220
T: (412) 921-7090 | F: (412) 921-4040

Mountain Valley PIPELINE

MOUNTAIN VALLEY PIPELINE PROJECT

STREAM CROSSING EXHIBIT

STREAM NAME: S-PP20
STATION: 11496+62
COUNTY: MONTGOMERY

DATE:	12/13/16
PROJECT NO.:	112IC07157
DESIGNED BY:	DW
DRAWN BY:	JK
CHECKED BY:	RE
SHEET: 1 OF 2	

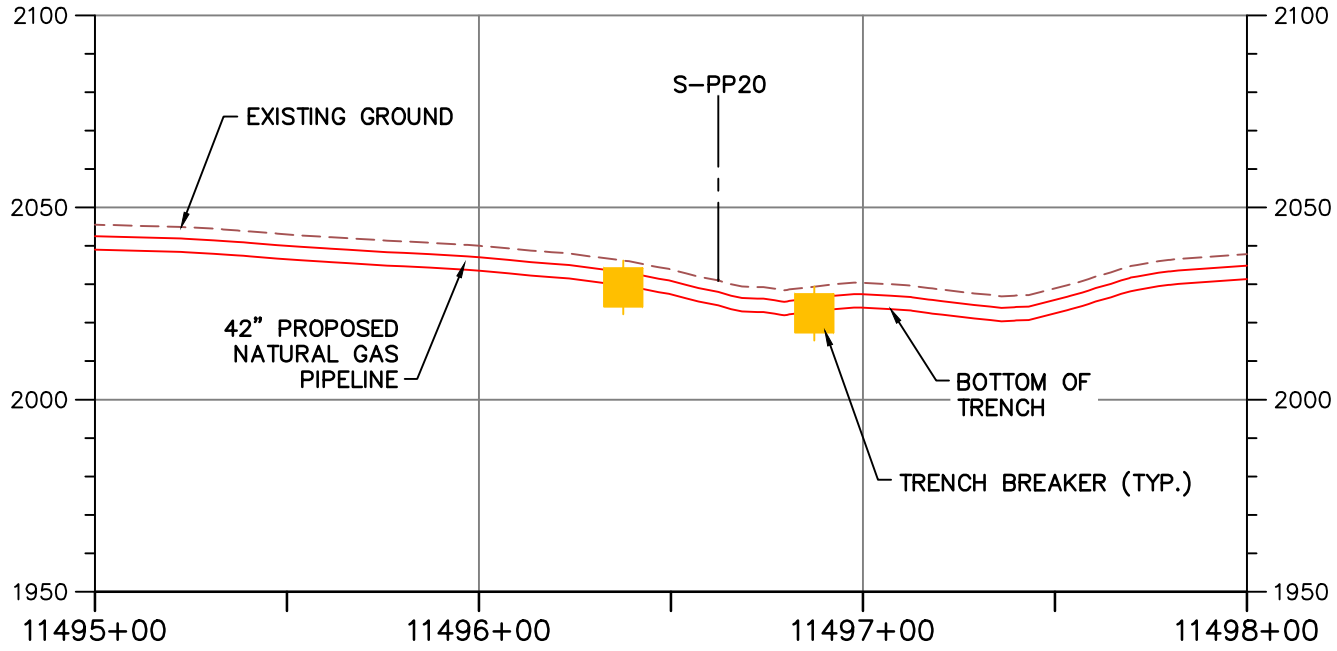

PROFILE VIEW

SCALE: 1" = 50'

50 0 50 100

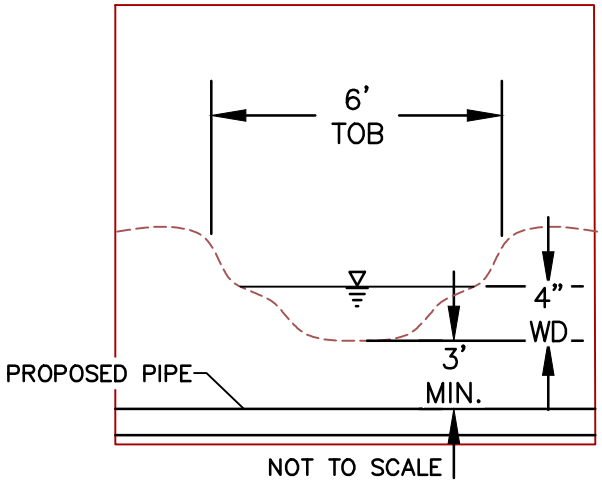

NOTE:
MINIMUM 3' OF COVER BETWEEN STREAM AND BOTTOM OF PIPELINE

TETRA TECH
WWW.TETRATECH.COM
661 ANDERSEN DRIVE – FOSTER PLAZA 7
PITTSBURGH, PA 15220
T: (412) 921–7090 | F: (412) 921–4040

Mountain Valley PIPELINE

MOUNTAIN VALLEY PIPELINE PROJECT

STREAM CROSSING EXHIBIT

STREAM NAME: S–PP20
STATION: 11496+62
COUNTY: MONTGOMERY

DATE:	12/13/16
PROJECT NO.:	112IC07157
DESIGNED BY:	DW
DRAWN BY:	JK
CHECKED BY:	RE
SHEET: 2 OF 2	

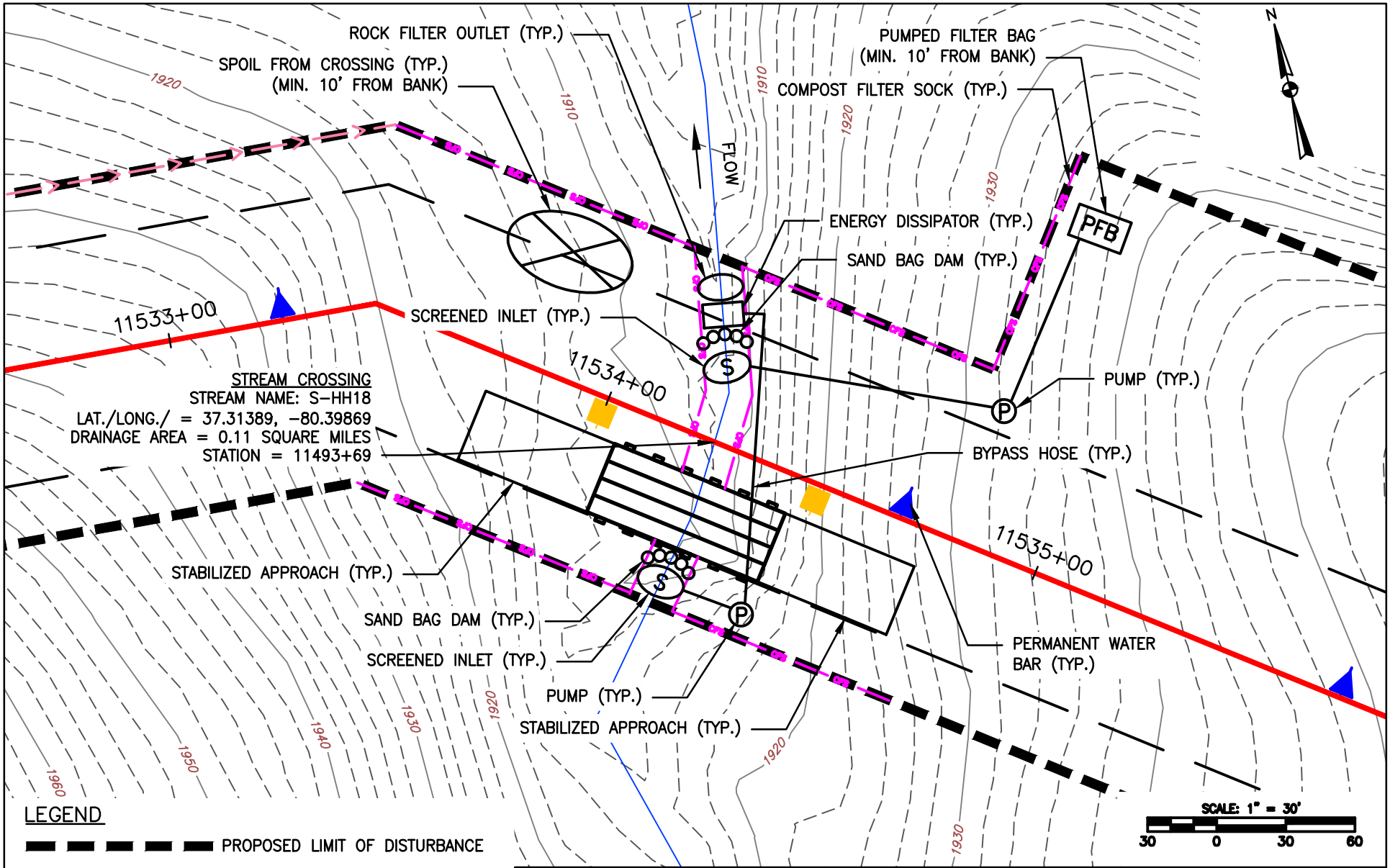

LEGEND

- PROPOSED LIMIT OF DISTURBANCE
- PROPOSED R.O.W.
- PROPOSED PIPELINE
- CFS — PROPOSED COMPOST FILTER SOCK
- TIMBER MAT
- PROPOSED TRENCH BREAKER

TETRA TECH
WWW.TETRATECH.COM
661 ANDERSEN DRIVE – FOSTER PLAZA 7
PITTSBURGH, PA 15220
T: (412) 921-7090 | F: (412) 921-4040

Mountain Valley PIPELINE

MOUNTAIN VALLEY PIPELINE PROJECT

STREAM CROSSING EXHIBIT

STREAM NAME: S-HH18
STATION: 11534+25
COUNTY: MONTGOMERY

DATE:	12/13/16
PROJECT NO.:	112IC07157
DESIGNED BY:	DW
DRAWN BY:	JK
CHECKED BY:	RE
SHEET: 1 OF 2	

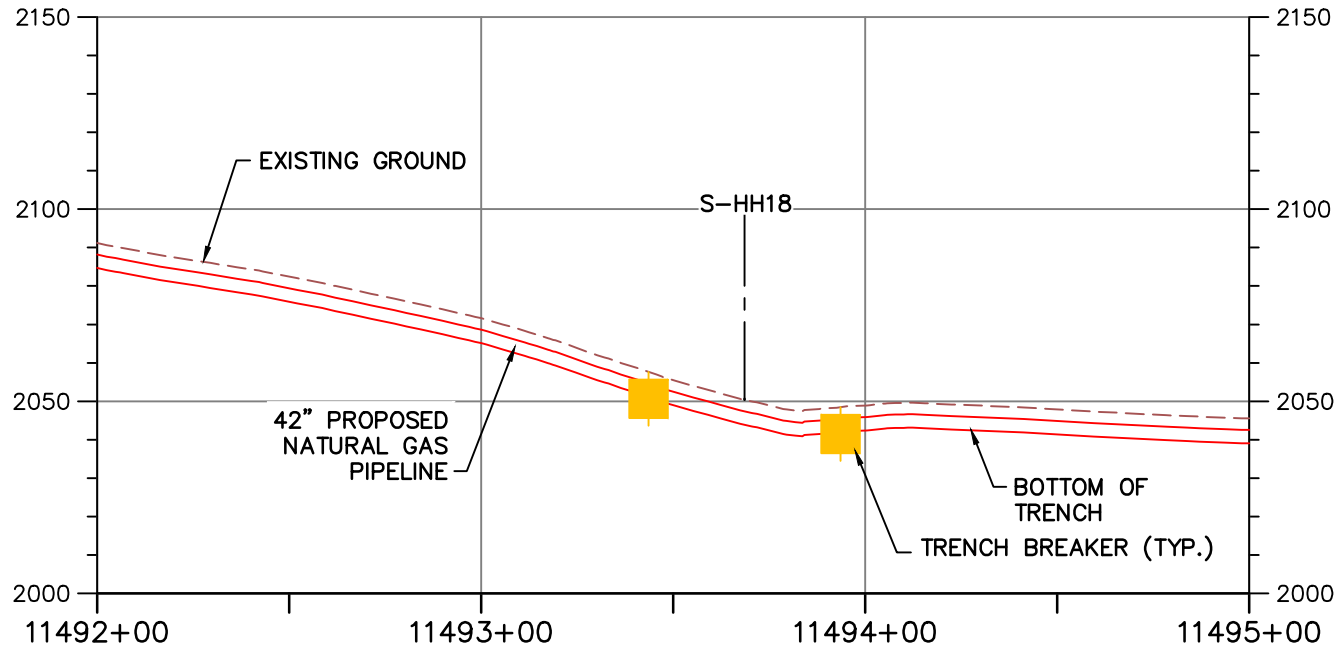

PROFILE VIEW

SCALE: 1" = 50'

50 0 50 100

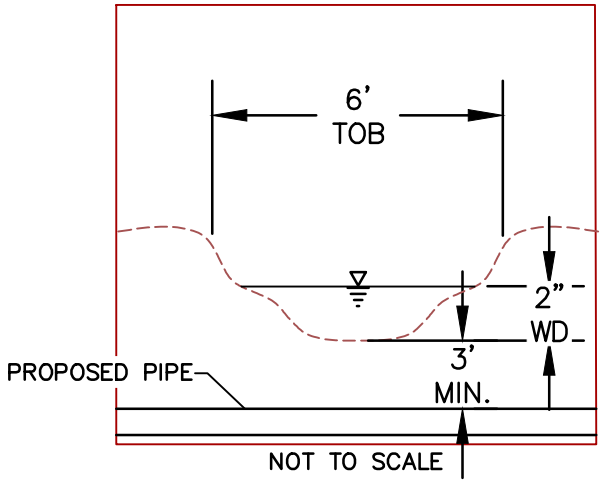

NOTE:
MINIMUM 3' OF COVER BETWEEN STREAM AND BOTTOM OF PIPELINE

TETRA TECH
WWW.TETRATECH.COM
661 ANDERSEN DRIVE – FOSTER PLAZA 7
PITTSBURGH, PA 15220
T: (412) 921-7090 | F: (412) 921-4040

Mountain Valley PIPELINE

MOUNTAIN VALLEY PIPELINE PROJECT

STREAM CROSSING EXHIBIT

STREAM NAME: S-HH18
STATION: 11493+69
COUNTY: MONTGOMERY

DATE:	12/13/16
PROJECT NO.:	112IC07157
DESIGNED BY:	DW
DRAWN BY:	JK
CHECKED BY:	RE
SHEET: 2 OF 2	

Mountain Valley Pipeline, LLC
Mountain Valley Pipeline Project
FERC Docket No. CP16-10-000

Attachment 83
Response to Comment #83

USFS COMMENT #83

"At this time, the extent of blasting for the Project is unknown." This statement is inappropriate for a Plan of Development at this stage of the process. Engineering geologists and geotechnical engineers could make reasonable estimates of the extent of blasting on NFS lands. Exposures of bedrock (such as in bedrock outcrops, road cuts, or soils pits dug along the proposed route (Mountain Valley Pipeline Soil Profile Descriptions Report for Jefferson National Forest, April 2016)) along the pipeline corridor and access roads provide some information about the excavation characteristics of the different bedrock formations. The pipeline corridor is a narrow slice through many different geologic bedrock formations. However, these bedrock formations extend for many miles to the northeast and southwest from the corridor and are exposed in road cuts and other excavations along the strike (trend) of the geologic formations outside the project footprint. Supplement the information from limited exposures of bedrock formations in the corridor with information from more extensive exposures of the same bedrock formations outside the project footprint. Conduct engineering geologic inspections of existing exposures of bedrock (natural or excavated) inside and outside the project footprint sufficient to estimate the excavation characteristics of the geologic formations in the project footprint, and to estimate by mileposts the sections of rippable rock vs. non-rippable rock requiring blasting. Confer with highway departments, construction contractors and other sources as needed to classify excavation characteristics of the geologic formations during previous construction projects.

Using this information on excavation characteristics of the geologic formations (or subsection of the formation) in the project footprint, provide a map and table with mileposts showing the likely areas and extent of blasting on NFS lands. A seismic refraction survey would improve this estimate, but this estimate has value and is needed whether or not a seismic survey is conducted. See related comments on section 5.5.1 (page 5-10).

MVP RESPONSE TO USFS COMMENT #83

Mountain Valley conducted field reconnaissance along the Mountain Valley Pipeline (MVP) October 2016 Proposed Route on U.S. National Forest Service (NFS) properties to estimate depth to bedrock, potential for rippability, and the related extent of potential blasting that may be required for pipeline construction. The term rippable is subjective, but in this presentation generally means bedrock that is capable of being excavated or trenched by conventional mechanical means without the use of blasting.

The NFS requested that Mountain Valley produce maps showing the proposed alignment and mile posts (to 1/10th mile precision) and identifying rippable versus non-rippable bedrock, and to summarize this information in tabular format. Mountain Valley assessed potential bedrock rippability on NFS property as described below in order to identify the extent of blasting that may, or may not, be required to remove bedrock for pipeline installation. However, until soil is removed and the rock characteristics determined by implementing conventional excavation techniques, the full extent of the need for blasting will be unknown.

As discussed below, nearly all of the proposed alignment on NFS properties is expected to be bedded in unconsolidated overburden or the shallow upper reaches of weathered bedrock that is rippable by conventional construction means. However, there is one area in particular that Mountain Valley identified where blasting may be required. Near Mile Post (MP) 196.4 (Figure 83-1), Mountain Valley is planning to bore under the ridge line of Peters Mountain in order to avoid the Appalachian Trail. Preparing the estimated 20 feet by 60 feet pad for staging the bore pit will require more extensive excavation of bedrock than trenching (per unit length) for conventional pipeline installation. Trenching will likely encounter the shallow upper reaches of weathered bedrock that is likely rippable, while the more extensive bore pit preparation may require removal of deeper, less weathered and consequently harder bedrock. Therefore, blasting may be required on NFS property for preparing the bore pit near MP 196.4, on the southeast slope of Peters Mountain near the ridge line (see map in Figure 83-1). All other portions of the proposed alignment shown in Figure 83-1 and Figure 83-2 are considered rippable and not specifically called-out on the maps, or the corresponding table discussed below.

Mountain Valley made direct observations along the proposed alignment, evaluated analog sites that are located on the same geologic formations (e.g., road cuts, publicly-available subsurface

exploration data) in areas underlain by the same bedrock as the proposed alignment (i.e., bedrock formations along strike many miles to the northeast and southwest and are exposed in road cuts outside the MVP project footprint). Mountain Valley also included data gathered from soil pits that were hand-dug along the proposed route (Mountain Valley Pipeline Soil Profile Descriptions Report for Jefferson National Forest, April 2016). Mountain Valley representatives conducting this work possess more than 26 years of experience in geology, geotechnical analysis and hydrogeology associated with permitting, planning, construction and monitoring of infrastructure throughout Virginia, and specifically in the Valley and Ridge geologic province of southwestern Virginia. This includes assessing the geotechnical characteristics of earth materials for excavation, blasting and construction.

The Valley and Ridge geologic province, which is the region where the proposed alignment crosses NFS property, takes its name from the topographic expressions of long linear high-standing ridges interspersed with lowland valley floors. Over the course of approximately 300 to 250 million years in the past (Pennsylvanian Period), what is now referred to as Africa converged on the North American craton through the process of plate tectonics. The resulting continent-to-continent collision induced compressional tectonic forces that affected bedrock orientation observed in modern times. In what is now the area referred to as the Valley and Ridge province, compressional tectonic forces resulted in complex folding and thrust faulting of bedrock, leaving some bedrock steeply dipping, and in some cases completely overturned. Beginning approximately 220 million years ago (Early Mesozoic - Late Triassic Period), the compressional forces that created the Appalachian Mountains were stilled as plate tectonic forces caused the supercontinent to begin rifting apart and forming a passive tectonic margin (e.g., the Atlantic Ocean basin). Weathering and erosion prevailed. The distinctive topography of the Valley and Ridge geologic province resulted from regional uplift during the Cenozoic Era (65 million years ago) that rejuvenated streams and preferentially weathered less-resistant bedrock (e.g., shale, carbonates) into lowland valleys, leaving more resistant sandstone formations at relatively higher elevations to form topographic ridges. This process of differential weathering of folded, faulted and steeply dipping bedrock resulted in the topography that is observed today in the Valley and Ridge province. In effect, topographic ridges of steeply dipping, fractured, and jointed sandstones are topographically higher than lowland valleys of more weathered bedrock. Mountain Valley considers the valley floors to be areas where the nature of bedrock that results

in these lowland areas will not require blasting for excavation. Therefore, the primary evaluation being undertaken here is focused on mid-slope and ridgetop bedrock exposures, where overburden may be thin and bedrock is relatively hard.

The proposed MVP alignment is located on NFS property between approximately MP 196.35 and MP 197.8, then re-enters NFS property between approximately MP 198.2 and MP 198.35 (Figure 83-1). The proposed alignment re-enters NFS property between approximately MP 218.35 and MP 219.35, and re-enters again between approximately MP 219.78 and approximately 220.7 (Figure 83-2).

Bedrock outcrops are relatively rare along the proposed alignment, typically found where weather-resistant Mississippian and Siluro-Ordovician age sandstones form the ridge tops. Limited areas of shale and siltstone outcrops are exposed at stream erosion features (channels) downslope in valley bottoms. But, the majority of bedrock underlying the proposed route through NFS property (i.e., between MP 196.3 and MP 220.7) is covered by residual soil mantle, or overburden comprised of colluvial deposits and in some areas ancient debris flows.

Field Reconnaissance of Proposed Alignment on NFS Property

The following descriptions of field observations for bedrock depth and rippability begin at the northwestern boundary of NFS property near MP 196.35 (also the West Virginia and Virginia border), and progress to the east-southeast.

As shown in site Photo 83-1 below, southeast dipping, weather-resistant sandstone bedrock (White Medina; equivalent to Tuscarora Formation) outcrops on the ridge line of Peters Mountain at the northwest boundary of NFS lands.

Photo 83-11: White Medina (Tuscarora) ridge-forming bedrock dipping south-southeast (See Figure 83-1 for approximate location) (view is to the southwest)

Soil test pit SP#2 (Figure 83-1) met refusal at approximately 1.5-feet below ground.

Mountain Valley is proposing to bore under the ridge line of Peters Mountain to avoid the Appalachian Trail. The bore pit on NFS property would be located near MP 196.4, and boring would proceed to the west under the ridge line. Mountain Valley may need to blast bedrock in order to establish the bore pit (see earlier discussion). Possible blasting would occur under controlled conditions by a qualified blasting contractor, and in accordance with a site-specific blasting plan. The extent of blasting on NFS property would be minimal, and contained within the area of the bore pit (approximately 20 feet by 60 feet near MP 196.4) (See Figure 83-1).

Downslope of the bore pit between approximately MP 196.5 to MP 196.7, Schultz and Stanley (2001) map a relatively large colluvial deposit overlying Silurian Age Rose Hill Formation bedrock (see Photo 83-2).

Photo 83-22: Colluvial deposit (see Rose Hill Formation float on ground) on southeast slope of Peters Mountain near MP 196.6.

Photo 83-33: Colluvial deposit on southeast face of forest road cut (hat for scale), showing approximately 8 to 10 feet of overburden in road cut approximately 800 feet northwest of MP# 196.6.

Proposed MVP construction in the vicinity of MP 196.5 to MP 196.7 will likely remain within the colluvial deposit, or possibly encounter shallow and highly weathered rippable bedrock that underlies the colluvium. While outcrops were not observed in drainages that could be used to

verify depth to bedrock, observations of analog sites (discussed below) suggest that colluvial overburden is sometimes dozens of feet thick. In summary, blasting would likely not be required in this area for construction.

Further to the southeast, between approximately MP 197.0 and MP 197.8, weather-resistant sandstone bedrock outcrops at the ground surface (Photos 83-4 and Photo 83-5), or is distributed on the ground surface with thin residual overburden mantle (Photo 83-6).

Photo 83-44: Sandstone outcrop in the vicinity of MP 197.0

Soil test pit SP#4 (Figure 83-1) penetrated two (2) feet below ground surface, and while refusal is not noted for the hand-dug pit, the description notes abundant cobbles, stones, boulders, which indicates that excavation and ripping the subsurface is possible.

Photo 83-55: Sandstone float and some exposure of bedrock (i.e., thin to no overburden mantle) in the vicinity of MP 197.4.

The proposed alignment traverses the ridgeline where bedrock is observed to outcrop (or be covered with thin overburden) between approximately MP 197.4 and M# 197.8 where the proposed alignment leaves NFS property.

Photo 83-66: Bedrock and float at ground surface with little to no overburden mantle in the vicinity of MP 197.8.

Soil test pit SP#5 at approximately MP 197.73 (Figure 83-1) encountered bedrock at 1.5 feet below ground surface.

Further downslope, at approximately MP 198.2 the alignment re-enters NFS property until approximately MP 198.35. This section of the alignment (MP 198.2 to 198.35) is underlain by colluvial deposits.

The proposed alignment re-enters NFS property at approximately MP# 218.53 (Figure 83-2) on the ridgeline of Sinking Creek Mountain. According to Rader and Gathright (1986) bedrock forming the ridge line of Sinking Creek Mountain is the southeast dipping Silurian age Rose Hill Formation sandstone conformably in contact with the older Tuscarora Formation. Both the Rose Hill and Tuscarora Formations were observed to outcrop on the ridge line in different exposures (see Photo 83-7).

Photo 83-7: Rose Hill sandstone outcrop on Sinking Creek Mountain ridge top (see Figure 83-2 for approximate location), dipping to the south (view to northeast)

Downslope from the ridge line in the area corresponding to MP 218.65 and MP 218.8 (Figure 83-2), Schultz (1993) mapped a rock-block slump, comprised of Tuscarora Formation sandstone. A characteristic of the slump is that it formed a low-relief area at the base of a steep slope leading to the ridge line.

Photo 83-7: Rock block slump at approximately MP 218.75 nearly flat grade (view is to the south, downslope from the ridgeline). See Figure 83-2 for approximate location.

Soil test pits SP#8 and SP#9 (Figure 83-2; approximate locations at MP 218.6 and 218.75, respectively) encountered sandstone and shale bedrock at approximately 2.5 and 2.2 feet, respectively, below ground surface.

Downslope from the rock slump, at MP 218.8, Schultz (1993) mapped a debris flow.

Photo 83-8: Sandstone float in what is mapped as an ancient debris flow and/or colluvial deposit near MP 219.0 Rock block slump at approximately MP 218.75 nearly flat grade (view is to the west-northwest). See Figure 83-2 for approximate location.

Soil test pit SP#10 (Figure 83-2; approximate location at MP 219.27) did not encounter bedrock at approximately three feet (apparent limit of hand-dug test pit).

The proposed alignment leaves NFS property at approximately MP 219.35, and re-enters NFS property at approximately MP 219.7 (Figure 83-2).

Highly fracture, moderately dipping shale and siltstone bedrock of the Brallier Formation (mapped by Rader and Gathright, 1986) was observed at the stream crossing at approximately MP 219.7 (see Photo 38-9).

Photo 83-9: Highly fractured and jointed Brallier Formation shale and siltstone near MP 219.7 (see Figure 83-2 for approximate location).

Ascending the northwest-facing ridge of Brush Mountain (between MP 219.7 to MP 220.7; Figure 83-2), no bedrock outcrops were observed. A thick residual overburden mantle (likely less than 10 feet) covers Devonian Age siliciclastic bedrock along the slope.

Mississippian Age Price Formation sandstone with southeast dip forms the ridge line of Brush Mountain, where the proposed alignment crosses at approximately MP 220.7.

The following table summarizes the assessment of bedrock rippability, and potential for blasting, along the proposed alignment within the NSF property.

Table 1. Bedrock Rippability and Possible Extent of Blasting for Mountain Valley Pipeline Alignment through National Forest Service Property				
Between Mile Posts		**Discussion**	**Rippability Assessment**	**Likely to require blasting?**
196.35	-	Enter NFS property	n/a	n/a
196.35	196.4	Peters Mountain ridgeline. Steeply dipping (southeast) thin-to-medium bedded sandstones outcrops, highly jointed.	Rippable due to outcrop orientation and jointing	No
196.4	196.45	Bore pit	Bore pit staging will require more rock excavation than trenching. May encounter unweathered hard rock that requires blasting to support excavation.	Possible
196.45	197.0	Alignment primarily underlain by unconsolidated colluvial and ancient debris flow deposits	Rippable due to unconsolidated deposits overlying the upper reaches of weathered bedrock.	No
197.0	197.8	Thin overburden mantle overlying highly jointed sandstone bedrock.	Rippable due to outcrop orientation and jointing	No
197.8	198.2	Leave NFS property	n/a	n/a
198.2	198.35	Re-enter NFS property. Underlain by by unconsolidated colluvial and ancient debris flow deposits	Rippable due to unconsolidated deposits overlying the upper reaches of weathered bedrock.	No
198.35	218.53	Leave NFS property	n/a	n/a
218.53	218.65	Re-enter NFS property. Sinking Creek Mountain ridgeline. Steeply dipping (southeast) thin-to-medium bedded sandstones outcrops, highly jointed.	Rippable due to outcrop orientation and jointing	No
218.65	218.8	Sandstone rock-block slump covered by overburden mantle.	Rippable due to unconsolidated deposits overlying the upper reaches of weathered bedrock.	No
218.8	219.35	Alignment underlain by unconsolidated colluvial and ancient debris flow deposits	Rippable due to unconsolidated deposits overlying the upper reaches of weathered bedrock.	No
219.35	219.7	Leave NFS property	n/a	n/a
219.7	220.72	Enter NFS property. Steeply dipping, highly jointed Brallier formation fine sandstone, siltstone, shale observed at stream crossing near MP 219.7.	Rippable due to outcrop orientation and jointing, and rock character.	No
219.72	220.7	Alignment ascends north slope of Brush Mountain crossing overburden mantle that overlying Brallier siliciclastic bedrock to the ridge line where Price Formation sandstone out crops.	Rippable due to unconsolidated deposits overlying the upper reaches of weathered bedrock. Thin to medium bedded ridge forming sandstones are steeply dipping and highly jointed and considered rippable.	No
-	220.7	Leave NFS property	n/a	n/a

Analog Sites

Mountain Valley selected analog sites to gather additional data on depth to bedrock and bedrock character. The analog sites included observations of bedrock along road cuts, and depth to bedrock measured from monitoring well drilling at landfill sites.

Analog Site #1 – Proposed Botetourt County Landfill

Botetourt County conducted an exploratory drilling program in 2003 to evaluate a site for the proposed development of a landfill. The site is located approximately 26 miles northeast of MP 220 to 221 on Brush Mountain. The bedrock underlying the proposed alignment on Brush Mountain strikes to the southwest-northeast and is found under the proposed landfill site, as well. Three borings encountered colluvial overburden on the ground surface ranging from 15 to 60 feet below ground surface, with an underlying transition to weathered residual sandstone grading to unweathered Price Formation clastic sedimentary bedrock. These observations suggest that the proposed pipeline on the lower slopes of Brush Mountain will remain in overburden or rippable bedrock.

Analog Site #2 – New River Resource Authority Landfill, Pulaski County, Virginia

The New River Resource Authority (NRRA) landfill located in Pulaski County is situated on the southeast side of Cloyd's Mountain, underlain by the Mississippian Age Price Formation. As with the Botetourt County site discussed above, bedrock strikes southwest-northeast and the Price Formation underlying the NRRA facility also underlies the proposed alignment where it crosses Brush Mountain in Montgomery County. The NRRA facility is located approximately 21 miles southwest of the vicinity of MP 220 to 221 on Brush Mountain. Auger refusal on Price Formation bedrock ranged from 25 to 40 feet below ground surface with an underlying transition to weathered residual bedrock grading to unweathered Price Formation clastic sedimentary bedrock. These observations suggest that the proposed pipeline on the lower slopes of Brush Mountain will remain in overburden or rippable bedrock.

Analog Site #3 – Road Cut, State Route 15 and 15/3, Monroe County, West Virginia

West Virginia State Route 15 and 15/3 are public roads that ascend the southeastern slope of Peters Mountain (underlain by Devonian to Silurian Age sedimentary bedrock), with the

ridgeline formed by the Silurian Rose Hill and Tuscarora Formation weather-resistant sandstones. The road is located approximately 16 miles northeast of MP 196.3 (Peters Mountain ridgeline and northwest boundary of NFS property) to 197.8 (where the proposed alignment enters private property). As discussed above, bedrock strikes to the southwest from the road cut and underlies the proposed alignment where it crosses Peters Mountain.

Photo 83-10: Tuscarora Formation sandstone forming ridgeline with thin overburden mantle of Peters Mountain on West Virginia State Route 15.

Further downslope to the southeast (i.e., analogous to descending the southeast slope of Peters Mountain between MP 196.4 to approximately MP 197.5), thin- to medium-bedded sandstones are interbedded with shale and siltstones of Ordovician to Devonian siliciclastic bedrock formations.

Photo 83-11 and Photo 83-12: Thick overburden mantle on southeast slope of Peters Mountain on West Virginia State Route 15.

Photo 83-13: Thin- to medium-bedded sandstones and thin overburden mantle interbedded with shales and siltstones on southeast slope of Peters Mountain on West Virginia State Route 15.

As illustrated in the photographs presented above, weather resistant sandstones are interbedded with shale and siltstone, with variable thickness of overburden mantle on the southeast slope of Peters Mountain on West Virginia State Route 15 (analog site #3). In many areas the overburden mantle is several feet thick, underlain by weathered bedrock. The thin- to medium-bedded sandstone bedrock formations are moderately to steeply dipping and highly jointed due to ancient tectonic stresses. Even where these formations are exposed in outcrop (e.g., ridge line), Mountain Valley does not anticipate that these bedrock exposures, analogs for what would likely be encountered along the proposed alignment to the southeast on Peters Mountain, could not be ripped for trenching by standard construction equipment and methods.

NFS Property Soil Pit Observations

Mountain Valley produced an April 2016 report for the Federal Energy Regulatory Commission (FERC), Project Docket No. CP16-10-000, entitled Mountain Valley Pipeline Soil Profile Descriptions Report for Jefferson National Forest. Fourteen test pits were dug by hand along the proposed alignment, and soils described and documented. The approximate soil test pit locations are shown on the maps of NFS properties in Figure 83-1 and Figure 83-2. The soil pits were dug by hand, and the total excavation depths were limited accordingly. In summary, shovel or hand

auger refusal in overburden ranged in depth from approximately 1.5 feet to 3.3 feet below ground surface, and refusal depth could not be confirmed to be on rock float or actual bedrock.

Conclusions and Recommendations

The NFS requested that Mountain Valley evaluate the proposed alignment located on NFS property for depth to bedrock, rock characteristics that would determine rippability, and to estimate the potential extent of blasting that may be required for pipeline construction. Mountain Valley made direct field observations along the proposed alignment, evaluated analog sites that are located on the same geologic formations, and integrated the results from a soil investigation project along the alignment (Mountain Valley Pipeline Soil Profile Descriptions Report for Jefferson National Forest, April 2016).

This report presented observations and photographic documentation of bedrock outcrops, overburden depths, and visual characterization of bedrock from the alignment and analog sites. Where bedrock is observed at the ground surface in outcrop (typically, only at the ridge lines), the rock is steeply dipping, highly jointed, and thin- to medium-bedded, such that Mountain Valley estimates these exposures are rippable. Interbedded sandstones shown in analog site road cuts, that are assumed to generally represent rock characteristics under the proposed alignment, also indicate that weather-resistant sandstones are steeply- to moderately-dipping, jointed, and generally of the character that is expected to be rippable by conventional mechanical means. Shale and siltstone bedrock, typically found mid- to down-slope on NFS property present no concerns as far as rippability goes. Based on field observations, nearly all of the proposed alignment on NFS properties is expected to be bedded in unconsolidated overburden or the shallow weathered bedrock that is rippable by conventional construction means.

Blasting may be required on NFS property for preparing the bore pit near MP# 196.4, on the southeast slope of Peters Mountain near the ridge line (see map in Figure 83-1) (note that the receiving pit for the bore on the north side of Peters Mountain is not located on NFS property). Therefore, Figure 83-1 notes the location of the bore pit where blasting may be required, but all other portions of the proposed alignment shown in Figure 83-1 and Figure 83-2 are considered rippable and not specifically called-out on the maps.

Mountain Valley has extensive experience with pipeline installation in the Dunkard, Monongahela, and Conemaugh Formations (Permian to Pennsylvanian Age clastic sedimentary bedrock) found in the Appalachian Plateau geologic province of northern West Virginia (e.g., Wetzel County). These geologic formations consist of cyclic sequences of shale, siltstone, sandstone, thin limestone beds, nonpersistent coal and other accessory rock types. These formations are similar in nature to the Ordovician to Mississippian clastic formations found in the Valley and Ridge geologic province of southwestern Virginia. Mountain Valley routinely rips these clastic sedimentary formations without the need for blasting. This information further supports the overall conclusion in this response, that mechanical ripping will be sufficient for bedrock trenching on NFS property without the use of blasting.

References:

Rader, E. K. and Gathright, T. M (1986) Geologic Map of Giles County, Virginia. Virginia Division of Mineral Resources, Publication 69, Commonwealth of Virginia, Department of Mines, Minerals, and Energy, Division of Mineral Resources, Charlottesville, VA.

Schultz, A. P. and Stanley, C. B. (2001). Geologic map of the Virginia portion of the Lindside Quadrangle, Virginia. Publication 160 Virginia Division of Mineral Resources; Cooperative Geological Mapping Program, U.S. Geological Survey.

Schultz, A. P. (1993). Geologic Map of Large Rock Block Slides at Sinking Creek Mountain, Appalachian Valley and Ridge Province, Southwestern Virginia, and Comparison with the Colorado Front Range. U.S. Geological Survey, Miscellaneous Investigation Series, Map I-2370. U.S. Department of the Interior.

Mountain Valley Pipeline, LLC
Mountain Valley Pipeline Project
FERC Docket No. CP16-10-000

Attachment 85
Updated Figures

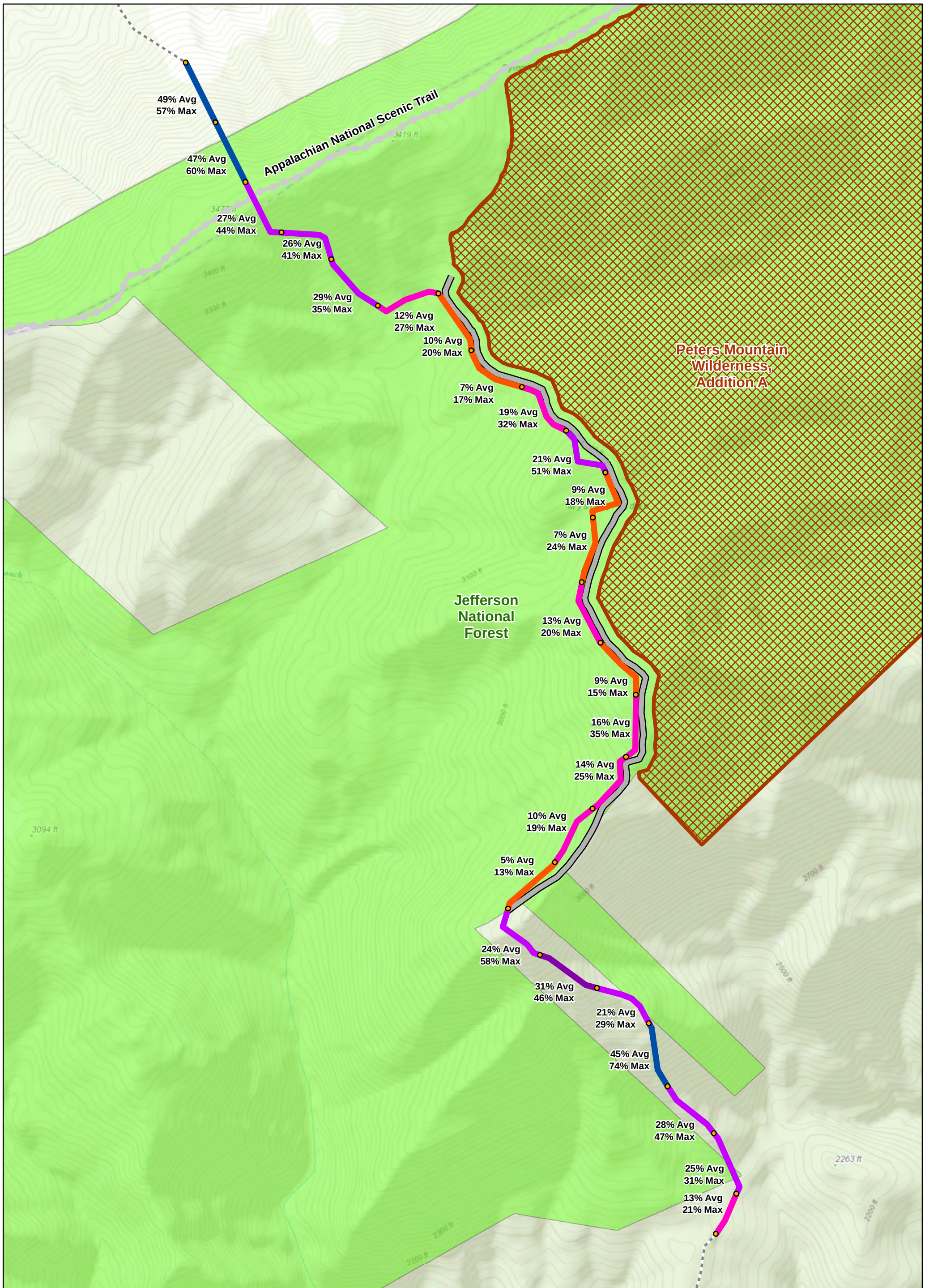

Mountain Valley PIPELINE

N W E S

AVERAGE SLOPE OF MOUNTAIN VALLEY PIPELINE THROUGH THE JEFFERSON NATIONAL FOREST
PAGE 1 OF 3

12/16/2016

0 0.2 0.4 Miles

LEGEND

- October 2016 Proposed Route (Revised)
- Mystery Ridge Road
- Appalachian National Scenic Trail
- Peters Mountain Wilderness, Addition A
- US Forest Service (National Forest) Lands

Avg. Slope

- 0% to 10%
- 10% to 20%
- 20% to 30%
- 30% to 40%
- 40% to 50%

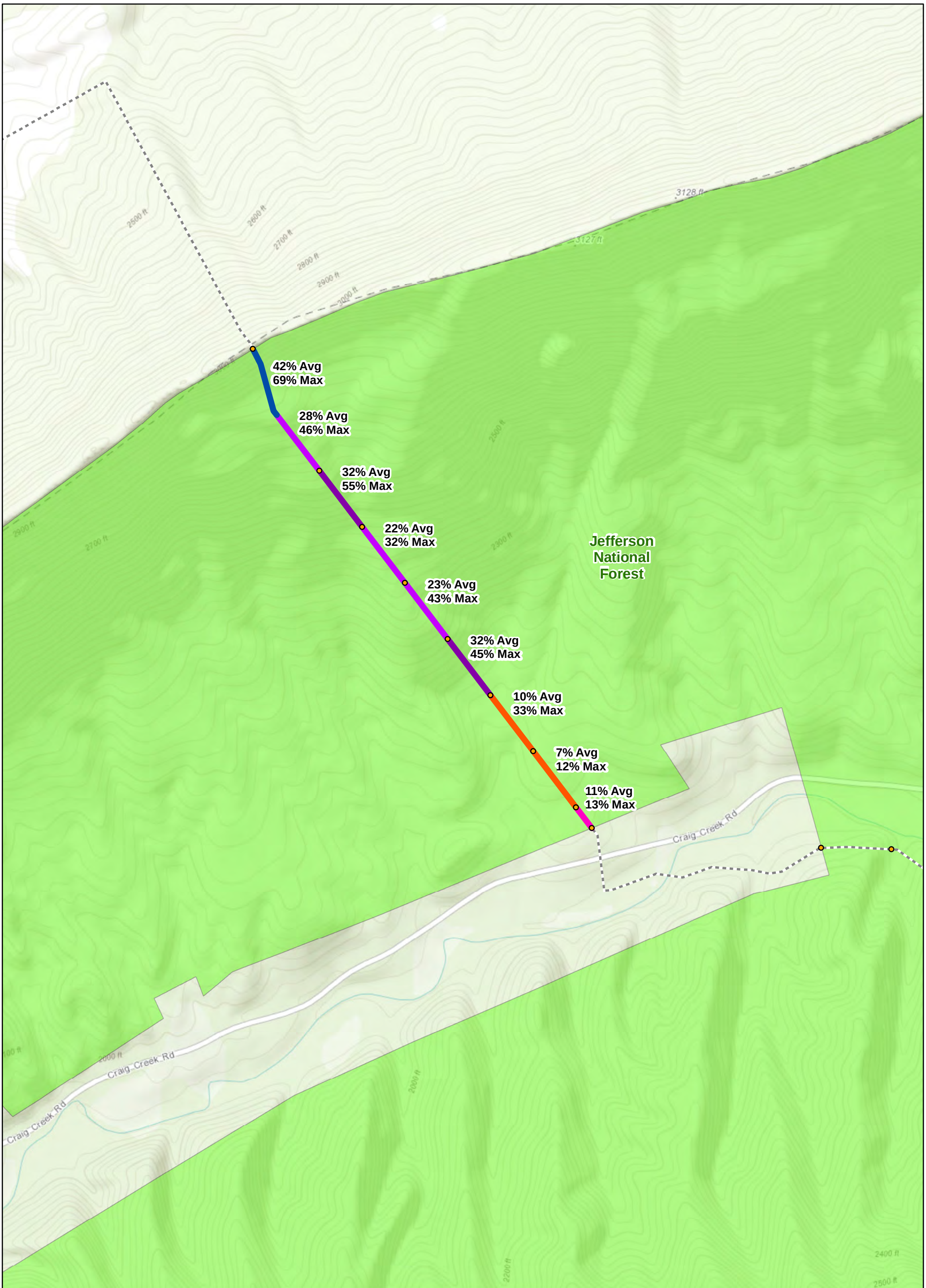

Mountain Valley PIPELINE

AVERAGE SLOPE OF MOUNTAIN VALLEY PIPELINE THROUGH THE JEFFERSON NATIONAL FOREST
PAGE 2 OF 3

12/12/2016

0 0.2 0.4 Miles

LEGEND

- October 2016 Proposed Route (Revised)
- US Forest Service (National Forest) Lands

Avg. Slope

- 0% to 10%
- 10% to 20%
- 20% to 30%
- 30% to 40%
- 40% to 50%

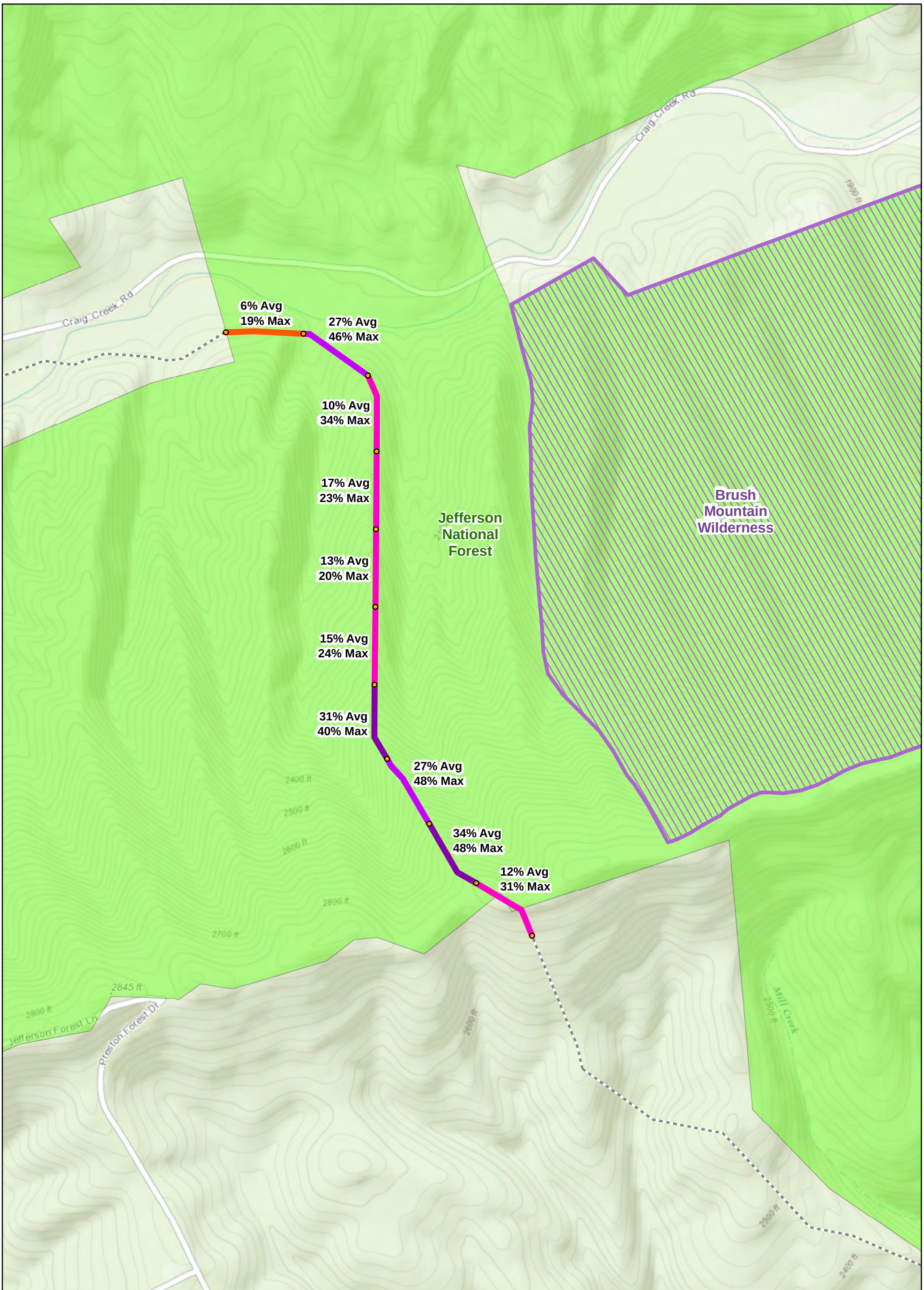

Mountain Valley PIPELINE

N W E S

AVERAGE SLOPE OF MOUNTAIN VALLEY PIPELINE THROUGH THE JEFFERSON NATIONAL FOREST
PAGE 3 OF 3

0 0.2 0.4 Miles

12/12/2016

LEGEND

- October 2016 Proposed Route (Revised)
- Brush Mountain Wilderness
- US Forest Service (National Forest) Lands

Avg. Slope

- 0% to 10%
- 10% to 20%
- 20% to 30%
- 30% to 40%
- 40% to 50%

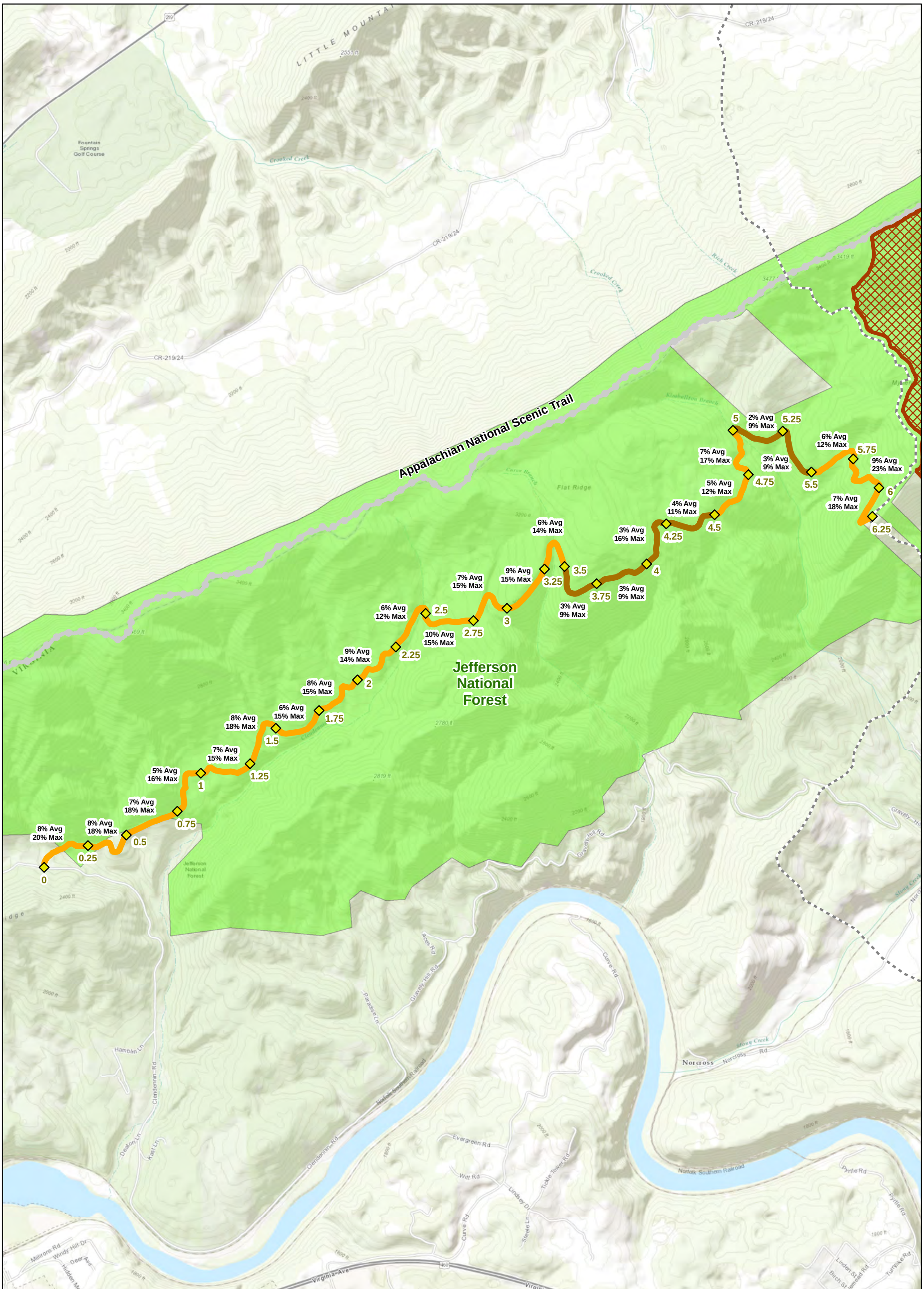

Mountain Valley PIPELINE

AVERAGE SLOPE OF POCAHONTAS ACCESS ROAD THROUGH THE JEFFERSON NATIONAL FOREST

12/13/2016

0 0.5 1 Miles

LEGEND

- October 2016 Proposed Route (Revised)
- Appalachian National Scenic Trail
- Peters Mountain Wilderness, Addition A
- US Forest Service (National Forest) Lands

Avg. Slope

- 0% to 5%
- 5% to 10%