Responses to Data Requests

Attachment RR5-11a

Mountain Valley Pipeline Project

Docket No. CP16-10-000

Traffic and Transportation Management Plan

October 2015
Revised October 2016

Table of Contents

1.0 Introduction 1
2.0 Traffic Impacts 1
3.0 Pipeline Road Crossings 5
4.0 Construction Traffic 5
5.0 Noxious Weeds 5
6.0 Fugitive Dust Control 6
7.0 Inspection, Monitoring and Record Keeping 7
8.0 Transportation Management on Federal Lands 8
8.1 Jefferson National Forest 8
8.2 National Park Service 8

1.0 Introduction

Mountain Valley Pipeline, LLC (MVP) has developed this Traffic and Transportation Management Plan to describe the measures MVP and their Contractors will take to minimize potential impacts on federal, state and local roadways during the construction of the Project. This plan outlines traffic impact minimization measures, noxious weed control measures, and dust control methods that will be used on the Project to reduce impacts during construction.

Operations and maintenance activities will be conducted with light vehicles at very few occasions that should have no impact to roadways and traffic once the project is in-service.

2.0 Traffic Impacts

Prior to construction, MVP will obtain applicable Federal, State/Commonwealth, and local road use and crossing permits, as required. MVP personnel will comply with all permit requirements and conditions to provide for public safety and minimize impacts on public roads. Copies of this *Traffic and Transportation Management Plan* and applicable road use and crossing permits will be provided to the appropriate personnel and maintained at each Contractors' field office.

MVP's Traffic Coordinator will consult with State/Commonwealth and local agencies regarding detour routes, speed/load limits, and other use limitations, conditions, or restrictions on the roads that will be utilized during construction. Before the start of construction, MVP will work with these agencies to obtain the most up-to-date traffic information for the roadways in the MVP Project area as well as ongoing road reconstruction or improvement projects in the vicinity of the pipeline route and facilities area. Where local, private roadways will be affected, MVP will coordinate with landowners and lessees of properties to mitigate potential impacts on those roads. Similarly, where roads on public lands will be affected, MVP will coordinate with the appropriate managing agency to mitigate potential impacts on roads or implement required traffic and transportation procedures. As discussed further in the following sections, MVP will place and maintain traffic control measures, such as flag persons, warning signs, lights, and/or barriers, as appropriate, to ensure the safety of construction workers and the public and to minimize traffic congestion. MVP will maintain traffic flow and emergency vehicle access on roadways with traffic control personnel or detour signs, where necessary. MVP's Traffic Coordinator will work with local law enforcement, fire departments, and emergency medical services to coordinate access for effective emergency response during construction. Contractors will be directed to comply with local weight limitations and restrictions on area roadways.

MVP strives to mitigate the increase in construction-related truck traffic on local roads shared with community and school buses in suburban and more densely populated rural areas. Key components to a successful community partnership include:

- Central point of command for construction traffic route plan. MVP will have a Traffic Coordinator reporting to the Safety Program Manager responsible for maintaining traffic related plans, procedures, records, and documents.

- School bus curfews. Often times construction vehicles can pose concern when school buses are traveling their established routes. The community expects for their children to have safe and timely travel to and from school. MVP will work with the governing School Districts or the School Transportation Department in the project area to identify the bus routes and times. Construction traffic will be limited or refrained during the bus route times with a published school bus route curfew time period.

- Speed enforcement. In more rural areas, law enforcement is often not staffed to handle a sudden increase in traffic. Establishing a third-party contractor to assist in monitoring the speed of the route not only keeps contractor and the public safe but lends accountability to MVP. Inevitably, contractors will end up off of bonded routes. The Traffic Coordinator will be able to actively monitor these issues and reduce unbonded travel that can become costly if damage occurs. The Coordinator can also be useful in diffusing potential hostile situations with neighbors and landowners.

All impacts shall be within the guidelines of all applicable agencies, as well as approval from landowners. A list of state and county contacts is provided in the table below. At completion of the Project, MVP will restore all roads back to their original level of service or better, unless MVP is directed otherwise in writing by the landowner or regulatory agency. Pre-construction video will be used to document the roadway condition prior to Project usage.

County, State Requirements			
	Phone	**Website**	**Contact Name/Position**
State Agency			
West Virginia Department of Transportation (WVDOT)	(304) 558-0384	http://www.transportation.wv.gov	Wayne Kessinger, Permits Section Administrator
WVDOT	(304) 842-1500	http://www.transportation.wv.gov	Gary Clayton, P.E., Statewide Oil and Gas Coordinator
West Virginia County			
Wetzel	(304) 455-8217	http://www.wetzelcounty.wv.gov/	Larry Lemon, County Commissioner
Harrison	(304) 624-8690	http://www.harrisoncountywv.com/	Linda Cross, Deputy Director of Planning Commission
Doddridge	(304) 873-2631	http://www.doddridgecounty.wv.gov/	George Eidel, OES Manager
Lewis	(304) 269-8200	http://www.lewiscountywv.org/	Cindy Whetsell, County Administrator
Braxton	(304) 765-2835	http://www.braxtoncounty.wv.gov/	Edie Tichner, Administrative Assistant
Webster	(304) 847-7600	http://www.webstercounty.wv.gov/	Traci Dean, County Administrator/Floodplain Manager
Nicholas	(304) 872-0811	http://www.nicholascountywv.org/	David Brown, County Maintenance Assistant Supervisor
Greenbrier	(304) 647-6689	http://www.greenbriercounty.net/	Kelly Banton, Commission Assistant
Fayette	(304) 574-4273	http://www.fayettecounty.wv.gov/	Tim Richardson, Zoning Enforcement Officer
Summers	(304) 466-7126	http://www.summerscountywv.org/	Greg Bandall, County Assessor
Monroe	(304) 772-3096	http://www.monroecountywv.net/	Donald Evans, County Clerk
West Virginia Community			
Smithfield (town)	(304) 334-5641	N/A	
Salem (city)	(304) 838-3635	http://www.local.wv.gov/salem/	Ronnie Davis, City Manager
Cowen (town)	(304) 226-3101	http://www.local.wv.gov/cowen/	Tammy Crue, Mayor
Camden-on-Gauley (town)	(304) 226-8667	http://www.local.wv.gov/camdenongauley/	Lisa Cutlip, Mayor
Quinwood (town)	(304) 438-6658	N/A	Cassandra Childers, Town Clerk
Rainelle (town)	(304) 438-7191	http://www.rainelle-wv.com/	Eddie Midkiff, Town Recorder
Rupert (town)	(304) 392-5682	http://www.local.wv.gov/rupert/	Jim Nichols, Mayor

County, State Requirements			
	Phone	**Website**	**Contact Name/Position**
State Agency			
Virginia Department of Transportation (VDOT)	(540) 381-7194	http://www.virginiadot.org/	Paul Brown, Area Land Use Engineer
Virginia County			
Giles	(540) 921-2525	http://www.gilescounty.org/	Bryan Reed, Subdivision Agent/VDOT Project Administrator
Montgomery	(540) 394-2148	http://www.montgomerycountyva.gov/	Emily Gibson, Planning Director
Roanoke	(540) 776-7190	http://www.roanokecountyva.gov/	Richard Caywood, Assistant County Administrator
Franklin	(540) 483-3030	http://www.franklincountyva.gov/	Neil Holthouser, Director of Planning/Community Development
Pittsylvania	(434) 432-7974	http://pittsylvaniacountyva.gov/	Greg Sides, Assistant County Administrator
Virginia Community			
Pearisburg (town)	(540) 921-0340	http://www.pearisburg.org/	Rick TawneyTown Engineer/Director of Public Works
Pembroke (town)	(540) 626-7191	http://www.pembrokeva.org/	Stanley Lucas, Utility Director
Newport (village)	(540) 544-6822	http://www.newportrecreation.com/	Ava Howard, Community Action Committee Marketing Director
Blacksburg (town)	(540) 961-1100	http://www.blacksburg.gov/	Randy Formica, Construction Engineer
Boones Mill (town)	(540) 334-5404	http://www.townofboonesmill.org/	Jane Campbel, Town Treasurer
Rocky Mount (town)	(540) 483-0907	http://www.rockymountva.org/	Josh Gibson, Town Planner
Chatham (town)	(434) 432-8153	http://www.chatham-va.gov/	Bob Hanson, Director of Public Works

3.0 Pipeline Road Crossings

MVP will construct road and highway crossings in accordance with the permit requirements and the construction drawings for the crossing. No work on any such crossing shall be started before obtaining all applicable permits from the regulatory agencies. At a minimum, MVP will maintain single lane traffic on all roads and shall provide flagmen, road signs and all other signaling required by the governing authority to supervise the flow of traffic. MVP will provide barricades, warning signs, flares, lanterns, flagmen and such other protective measures required to maintain traffic and to safeguard the public at all times.

Any damage to paved or blacktop roads shall be repaired per specifications provided by the regulatory agencies. Road surfaces other than hard surface roads (i.e., paved, blacktop, or concrete) shall be backfilled in well-tamped 6-inch layers and shall be finished with a well-tamped surface matching the existing road. If flowable fill is used, it will be in accordance with the appropriate mix per agency specifications. For all types of crossings, additional or other limitations may be provided by the governing municipality and must prevail.

At the end of each workday, MVP will make passable any open-cut driveways for ingress and egress. This may be accomplished by using steel plates. Any and all steel plates used for such purposes shall be properly pinned (i.e., secured in place) and ramped on each end to allow traffic flow. The backfilling road crossings shall be performed immediately after the pipe is installed and in accordance with requirements established by the applicable permit.

4.0 Construction Traffic

An increase in traffic to local and state roads will be expected throughout the day between the hours of 6 am to 7 pm. The temporary traffic will include transportation for construction workers in light and heavy duty trucks, as well as tractor trailers hauling machinery and materials. Impacts are expected to be minor and short term because construction spreads and personnel will be geographically dispersed and personnel will commute to and from work areas in early morning and late evening during nonpeak traffic hours. Traffic will be entering and leaving off-site locations such as laydown yards, right-of-way and additional temporary workspace for the purpose of pipeline construction, hauling material and roadway maintenance. Once the material and heavy equipment are placed on the right-of-way, construction equipment will move in a linear manner along the right-of-way as work progresses, minimizing traffic on local roads. The amount of equipment moved by hauling from site to site will be reduced due to the accessibility created by the construction right-of-way.

MVP intends to make road improvements at areas that are not conducive to heavy hauling and large traffic volume, in addition to maintaining all bonded roads during construction, and finally returning the roads back to their original or better level of service, meaning their original width and length, unless MVP is directed otherwise in writing by the landowner or state agency.

5.0 Noxious Weeds

To prevent noxious weeds from transporting along roadways, MVP developed the following plan:

- The prompt seeding and revegetation of areas of disturbed soils with certified weed-free seed.
- Encourage the cleaning of equipment and vehicles prior to entering or leaving each management area. (Pressure wash in a designated area only.)
- Minimize soil disturbance, where possible.

- Use certified weed-free mulch/straw for erosion control.
- Mowing of weeds in newly revegetated areas during the first season of establishment prior to seed formation of the weeds in the revegetated area. Care will be taken to encourage seed formation and growth of new native plants.

6.0 Fugitive Dust Control

Dirt and gravel during construction periods in dry weather can create an inhospitable environment for neighbors and workers. MVP developed the Fugitive Dust Control Plan to address this issue. Highlights of that Plan are also discussed below.

Implementation of construction and restoration best management practices and operational controls will be used to mitigate fugitive dust emissions. The project earth disturbance permit will outline specific practices that control fugitive dust, including a construction sequence; use of rock construction entrances; and temporary soil stabilization methods. Operational controls are also implemented, including the use of a reduced speed limit on unpaved access roads as well as sweeping/vacuuming paved roadways when Project-related soils are tracked out onto paved surfaces.

Wet suppression, using water, is the predominate method of suppressing fugitive dust on unpaved roads and gravel pads as it causes finer materials to adhere into larger particles. Increasing the moisture content of the finer materials may be accomplished either naturally or mechanically. Moisture content of unpaved road surfaces can be naturally increased through rainfall. Moisture content can also be increased mechanically through the application of water. The amount of water required to sufficiently control fugitive dust emissions is dependent on the characteristics of materials (e.g., surface moisture content), ambient conditions (e.g., rainfall, humidity, temperature), activities occurring in the area (e.g., vehicle traffic, vehicle weight, speeds), etc.

The following actions will be taken to reduce fugitive dust from our operations:

I. Pipeline Construction Activities and Other Earth Disturbances

Fugitive dust emissions from vegetation removal, clearing and grading, cutting and filling, topsoil removal, trenching, backfilling and stockpile storage will be controlled to a great extent by following the construction sequencing and disturbing limited areas at a time. If sustained visible dust plumes occur, dust suppression can be achieved by applying water along the travel lane and disturbed land via water truck. Spoil piles left undisturbed for four or more days should be temporarily stabilized with seed and mulch to prevent wind and water erosion.

II. Unpaved Roads

Fugitive dust emissions generated by motorized equipment and miscellaneous vehicle traffic will be controlled by wet suppression as necessary. Fugitive dust emissions from active access roads will be controlled by periodic wetting of surfaces using a water truck. During periods of high truck traffic, road surfaces will be wetted more frequently to minimize dust emissions. Watering will occur less frequently if weather conditions (e.g., rain, frozen surfaces, etc.) are adequate to suppress dust. On unpaved roads, MVP will limit the speed limit to reduce the potential of fugitive dust emissions. On unpaved roads, MVP will reduce the speed limit to reduce the potential of fugitive dust emissions.

III. Paved Roads

Fugitive dust emissions from paved roads will be controlled with a combination of water trucks, power washers, sweeping and/or vacuuming, as appropriate, to minimize the amount of fugitive dust that is generated and built up on the road surfaces.

IV. Track-out onto Roads

Trackout of loose materials will be controlled using rock construction entrances on access roads that begin at a junction with paved roads; this is done to prevent tracking of mud onto public roadways. In the event that loose material goes beyond the rock construction entrance, sweeping and or vacuuming will be used to remove the materials. In the event that loose material goes beyond the rock construction entrance, sweeping and or vacuuming will be used to remove the materials.

V. Deposition on Other Premises

MVP will take all appropriate actions to prevent the deposition of solid or liquid materials onto any other premises from the Project site and access roads that may cause or contribute to visible dust emissions. Preventive actions may include, but are not limited to dust control, such as wet suppression, the operation of a sweeper truck on paved roadways equipped with water suppression, and the operation of a vacuum truck.

VI. Tackifiers

Contractor may propose the use of tackifiers to reduce fugitive dust provided that the product to be utilized has been approved by the appropriate federal and state agencies where its application will occur. Contractor will detail the proposed use of any such substances in their dust control plan and provide copies of the material safety data sheets and application procedures. Typically, tackifiers used are DustFloc, RoadFloc and Kodiak Super TACKMixes.

7.0 Inspection, Monitoring and Record Keeping

The construction contractor will implement the dust control measures specified in this plan. All construction personnel will be informed of the measures in this plan. Environmental inspectors will have primary responsibility for monitoring and enforcing the implementation of dust control measures by the construction contractor. The inspectors will also be responsible for ensuring that these measures are effective and proper documentation is maintained. When environmental conditions are dry, inspection of dust control measures will be conducted daily, and the environmental inspectors will be responsible for recording the following information on a daily basis:

- weather conditions, including temperature, wind speed and wind direction;
- number of water trucks in use;
- incidents where dust concentration is such that special abatement measures must be implemented;
- condition of soils (damp, crusted, unstable, other) on the right-of-way and other construction sites;
- condition of soils (damp, crusted, unstable, other) on access roads;
- condition of track-out pads;
- overall status of dust control compliance.

This information will be incorporated into the environmental inspector's daily report, and significant instances of non-compliance with the plan will be reported to the Construction Manager as soon as they are discovered.

8.0 Transportation Management on Federal Lands

8.1 Jefferson National Forest

The MVP will cross roads and utilize access roads on U.S. Forest Service (USFS) lands in the Jefferson National Forest (JNF) in West Virginia and Virginia. Traffic and transportation management activities on these lands will conform to the standards and guidelines contained within the Land and Resource Management Plan (LRMP) of the JNF for road use, maintenance, and construction. Applicable standards and guidelines, as well as site-specific requirements for traffic and transportation management activities, will be addressed in the *Plans of Development* or *Construction, Operations, and Maintenance Plans* prepared for the USFS lands crossed by the MVP. Potentially applicable standards and guidelines are listed below.

- Roads shall be designed and constructed to the standard necessary to provide access and manage resources according to management prescription desired conditions and public safety (JNF LRMP FW-230).
- All new and reconstructed roads will blend into the landscape to the extent practical (JNF LRMP FW-232).
- Apply the level of maintenance needed to protect the investment, facilitate resource management, and provide for user safety (JNF LRMP FW-234).
- Closed system roads are planted with native or desirable non-native wildflowers, forbs, shrubs, and/or grasses (JNF LRMP FW-235).
- Specify management requirements for permittee access roads in the designated use permit, where roads are included in the authorization (JNF LRMP FW-248).

8.2 National Park Service

The MVP will cross National Park Service lands along the Blue Ridge Parkway in Virginia. MVP will use the Conventional Bore drill construction method to install the proposed pipeline under the parkway, which will avoid direct impacts on the parkway. No impacts on traffic along the Blue Ridge Parkway are anticipated.

Responses to Data Requests

Attachment RR5-11b

97 Cambridge Place | Bridgeport, WV 26330 | 304-626-7945

October 12, 2016

Virginia Department of Transportation
c/o Paul Brown
105 Cambria St.
Christiansburg , VA 24073

Re: MVP Traffic and Transportation Management Plan

Dear Virginia Department of Transportation, in the care of Paul Brown,

Mountain Valley Pipeline, LLC (MVP) has developed a Traffic and Transportation Management plan for its Mountain Valley Pipeline Project. This plan details precautions and measures that will be taken by the MVP team and their contractors during the construction of the Project. Please find this plan enclosed for your review and comment.

Thank you for your consideration.

Trevor Leamon
Sr. Project Manager
Mountain Valley Pipeline, LLC
(724) 873-3474 | tleamon@eqt.com

Enclosures

Virginia Department of Transportation,
in the care of Paul Brown
(V DOT)
Traffic & Transportation Management
Control Plan Mailed 10-12-2016

U.S. Postal Service
Certified Mail Receipt

ARTICLE NUMBER
9414 7118 9956 4852 1468 64

ARTICLE ADDRESS TO:
Virginia Department of Transportation
c/o Paul Brown
105 Cambria St. NW
Christiansburg VA 24073-1252

FEES

Postage per piece	$1.36
Certified Fee	3.30
Return Receipt Fee	2.70
Total Postage & Fees:	**$7.36**

Postmark
Here

Mountain Valley PIPELINE LLC

97 Cambridge Place | Bridgeport, WV 26330 | 304-626-7945

October 12, 2016

Bryan Reed, Subdivision Agent
315 North Main St.
Pearisburg, VA 24134

Re: MVP Traffic and Transportation Management Plan

Dear Bryan Reed, Subdivision Agent,

Mountain Valley Pipeline, LLC (MVP) has developed a Traffic and Transportation Management plan for its Mountain Valley Pipeline Project. This plan details precautions and measures that will be taken by the MVP team and their contractors during the construction of the Project. Please find this plan enclosed for your review and comment.

Thank you for your consideration.

Trevor Leamon
Sr. Project Manager
Mountain Valley Pipeline, LLC
(724) 873-3474 | tleamon@eqt.com

Enclosures

Bryan Reed, Subdivision Agent
(Giles)
Traffic & Transportation Management
Control Plan Mailed 10-12-2016

U.S. Postal Service
Certified Mail Receipt

ARTICLE NUMBER
9414 7118 9956 4852 1461 85

ARTICLE ADDRESS TO:
Bryan Reed, Subdivision Agent
315 North Main St.
Pearisburg VA 24134-1522

FEES

Postage per piece	$1.36
Certified Fee	3.30
Return Receipt Fee	2.70
Total Postage & Fees:	**$7.36**

Postmark
Here

97 Cambridge Place | Bridgeport, WV 26330 | 304-626-7945

October 12, 2016

Emily Gibson, Planning Director
755 Roanoke St., Suite 2A
Christiansburg, VA 24073

Re: MVP Traffic and Transportation Management Plan

Dear Emily Gibson, Planning Director,

Mountain Valley Pipeline, LLC (MVP) has developed a Traffic and Transportation Management plan for its Mountain Valley Pipeline Project. This plan details precautions and measures that will be taken by the MVP team and their contractors during the construction of the Project. Please find this plan enclosed for your review and comment.

Thank you for your consideration.

Trevor Leamon
Sr. Project Manager
Mountain Valley Pipeline, LLC
(724) 873-3474 | tleamon@eqt.com

Enclosures

Emily Gibson, Planning Director
(Montgomery)
Traffic & Transportation Management
Control Plan Mailed 10-12-2016

U.S. Postal Service
Certified Mail Receipt

ARTICLE NUMBER
9414 7118 9956 4852 1465 50

ARTICLE ADDRESS TO:
Emily Gibson, Planning Director
755 Roanoke St., Suite 2A
Christiansburg VA 24073-3169

FEES

Postage per piece	$1.36
Certified Fee	3.30
Return Receipt Fee	2.70
Total Postage & Fees:	**$7.36**

Postmark
Here

97 Cambridge Place | Bridgeport, WV 26330 | 304-626-7945

October 12, 2016

Richard Caywood, Assistant County Administrator
P.O. Box 29800
Roanoke, VA 24018-0798

Re: MVP Traffic and Transportation Management Plan

Dear Richard Caywood, Assistant County Administrator,

Mountain Valley Pipeline, LLC (MVP) has developed a Traffic and Transportation Management plan for its Mountain Valley Pipeline Project. This plan details precautions and measures that will be taken by the MVP team and their contractors during the construction of the Project. Please find this plan enclosed for your review and comment.

Thank you for your consideration.

Trevor Leamon
Sr. Project Manager
Mountain Valley Pipeline, LLC
(724) 873-3474 | tleamon@eqt.com

Enclosures

Richard Caywood, Assistant County Administrator
(Roanoke)
Traffic & Transportation Management
Control Plan Mailed 10-12-2016

U.S. Postal Service
Certified Mail Receipt

ARTICLE NUMBER
9414 7118 9956 4852 1416 78

ARTICLE ADDRESS TO:
Richard Caywood, Assistant County Administrator
P.O. Box 29800
Roanoke VA 24018-0798

FEES

Postage per piece	$1.36
Certified Fee	3.30
Return Receipt Fee	2.70
Total Postage & Fees:	**$7.36**

Postmark
Here

Mountain Valley PIPELINE LLC

97 Cambridge Place | Bridgeport, WV 26330 | 304-626-7945

October 12, 2016

Steve Sandy
Director of Planning/Community Development
1255 Franklin St., Suite 103
Rocky Mount, VA 24151

Re: MVP Traffic and Transportation Management Plan

Dear Steve Sandy, Director of Planning/Community Development,

Mountain Valley Pipeline, LLC (MVP) has developed a Traffic and Transportation Management plan for its Mountain Valley Pipeline Project. This plan details precautions and measures that will be taken by the MVP team and their contractors during the construction of the Project. Please find this plan enclosed for your review and comment.

Thank you for your consideration.

Trevor Leamon
Sr. Project Manager
Mountain Valley Pipeline, LLC
(724) 873-3474 | tleamon@eqt.com

Enclosures

Steve Sandy, Director of
Planning/Community Development
(Franklin)
Traffic & Transportation Management
Control Plan Mailed 10-12-2016

U.S. Postal Service
Certified Mail Receipt

ARTICLE NUMBER
9414 7118 9956 4852 1731 43

ARTICLE ADDRESS TO:
Steve Sandy
Director Of Planning and
Community Developmemt
1255 Franklin St., Suite 103
Rocky Mount VA 24151-1289

FEES

Postage per piece	$1.36
Certified Fee	3.30
Return Receipt Fee	2.70
Total Postage & Fees:	**$7.36**

Postmark
Here

Mountain Valley PIPELINE LLC

97 Cambridge Place | Bridgeport, WV 26330 | 304-626-7945

October 12, 2016

Gregory L. Sides, Assistant County Administrator
P.O. Box 426
Chatham, VA 24531

Re: MVP Traffic and Transportation Management Plan

Dear Gregory L. Sides, Assistant County Administrator,

Mountain Valley Pipeline, LLC (MVP) has developed a Traffic and Transportation Management plan for its Mountain Valley Pipeline Project. This plan details precautions and measures that will be taken by the MVP team and their contractors during the construction of the Project. Please find this plan enclosed for your review and comment.

Thank you for your consideration.

Trevor Leamon
Sr. Project Manager
Mountain Valley Pipeline, LLC
(724) 873-3474 | tleamon@eqt.com

Enclosures

Gregory L. Sides, Assistant County
Administrator
(Pittsylvania)
Traffic & Transportation Management
Control Plan Mailed 10-12-2016

U.S. Postal Service
Certified Mail Receipt

ARTICLE NUMBER
9414 7118 9956 4852 1742 49

ARTICLE ADDRESS TO:
Gregory L. Sides, Assistant County Administrator
P.O. Box 426
Chatham VA 24531-0426

FEES

Postage per piece	$1.36
Certified Fee	3.30
Return Receipt Fee	2.70
Total Postage & Fees:	**$7.36**

Postmark
Here

97 Cambridge Place | Bridgeport, WV 26330 | 304-626-7945

October 12, 2016

Rick Tawney, Town Engineer/Director of Public Works
112 Tazewell Street
Pearisburg, VA 24134

Re: MVP Traffic and Transportation Management Plan

Dear Rick Tawney, Town Engineer/Director of Public Works,

Mountain Valley Pipeline, LLC (MVP) has developed a Traffic and Transportation Management plan for its Mountain Valley Pipeline Project. This plan details precautions and measures that will be taken by the MVP team and their contractors during the construction of the Project. Please find this plan enclosed for your review and comment.

Thank you for your consideration.

Trevor Leamon
Sr. Project Manager
Mountain Valley Pipeline, LLC
(724) 873-3474 | tleamon@eqt.com

Enclosures

Rick Tawney, Town Engineer/Director
of Public Works
(Pearisburg)
Traffic & Transportation Management
Control Plan Mailed 10-12-2016

U.S. Postal Service
Certified Mail Receipt

ARTICLE NUMBER
9414 7118 9956 4852 1740 89

ARTICLE ADDRESS TO:
Rick Tawney, Town Engineer/Director of Public Works
112 Tazewell Street
Pearisburg VA 24134-1632

FEES

Postage per piece	$1.36
Certified Fee	3.30
Return Receipt Fee	2.70
Total Postage & Fees:	**$7.36**

Postmark
Here

97 Cambridge Place | Bridgeport, WV 26330 | 304-626-7945

October 12, 2016

Town of Pembroke
c/o Stanley Lucas, Utility Director
P.O. Box 5
Pembroke, VA 24136

Re: MVP Traffic and Transportation Management Plan

Dear Town of Pembroke, in the care of Stanley Lucas, Utility Director,

Mountain Valley Pipeline, LLC (MVP) has developed a Traffic and Transportation Management plan for its Mountain Valley Pipeline Project. This plan details precautions and measures that will be taken by the MVP team and their contractors during the construction of the Project. Please find this plan enclosed for your review and comment.

Thank you for your consideration.

Trevor Leamon
Sr. Project Manager
Mountain Valley Pipeline, LLC
(724) 873-3474 | tleamon@eqt.com

Enclosures

Town of Pembroke, in the care of
Stanley Lucas, Utility Director
(Pembroke)
Traffic & Transportation Management
Control Plan Mailed 10-12-2016

U.S. Postal Service
Certified Mail Receipt

ARTICLE NUMBER
9414 7118 9956 4852 1757 10

ARTICLE ADDRESS TO:
Town of Pembroke
c/o Stanley Lucas, Utility Director
P.O. Box 5
Pembroke VA 24136-0005

FEES

Postage per piece	$1.36
Certified Fee	3.30
Return Receipt Fee	2.70
Total Postage & Fees:	**$7.36**

Postmark
Here

97 Cambridge Place | Bridgeport, WV 26330 | 304-626-7945

October 12, 2016

Ava Howard
Community Action Committee Marketing Director
P.O. Box 92
Newport, VA 24128

Re: MVP Traffic and Transportation Management Plan

Dear Ava Howard, Community Action Committee Marketing Director,

Mountain Valley Pipeline, LLC (MVP) has developed a Traffic and Transportation Management plan for its Mountain Valley Pipeline Project. This plan details precautions and measures that will be taken by the MVP team and their contractors during the construction of the Project. Please find this plan enclosed for your review and comment.

Thank you for your consideration.

Trevor Leamon
Sr. Project Manager
Mountain Valley Pipeline, LLC
(724) 873-3474 | tleamon@eqt.com

Enclosures

Ava Howard, Community Action
Committee Marketing Director
(Newport)
Traffic & Transportation Management
Control Plan Mailed 10-12-2016

U.S. Postal Service
Certified Mail Receipt

ARTICLE NUMBER
9414 7118 9956 4852 1721 53

ARTICLE ADDRESS TO:
Ava Howard
Community Action Committee
Marketing Director
P.O. Box 92
Newport VA 24128-0092

FEES

Postage per piece	$1.36
Certified Fee	3.30
Return Receipt Fee	2.70
Total Postage & Fees:	**$7.36**

Postmark
Here

Mountain Valley PIPELINE LLC

97 Cambridge Place | Bridgeport, WV 26330 | 304-626-7945

October 12, 2016

Randy Formica, Construction Engineer
300 South Main St.
Blacksburg, VA 24060

Re: MVP Traffic and Transportation Management Plan

Dear Randy Formica, Construction Engineer,

Mountain Valley Pipeline, LLC (MVP) has developed a Traffic and Transportation Management plan for its Mountain Valley Pipeline Project. This plan details precautions and measures that will be taken by the MVP team and their contractors during the construction of the Project. Please find this plan enclosed for your review and comment.

Thank you for your consideration.

Trevor Leamon
Sr. Project Manager
Mountain Valley Pipeline, LLC
(724) 873-3474 | tleamon@eqt.com

Enclosures

Randy Formica, Construction Engineer
(Blacksburg)
Traffic & Transportation Management
Control Plan Mailed 10-12-2016

U.S. Postal Service
Certified Mail Receipt

ARTICLE NUMBER
9414 7118 9956 4852 1701 97

ARTICLE ADDRESS TO:
Randy Formica, Construction Engineer
300 South Main St.
Blacksburg VA 24060-4861

FEES

Postage per piece	$1.36
Certified Fee	3.30
Return Receipt Fee	2.70
Total Postage & Fees:	**$7.36**

Postmark
Here

Mountain Valley PIPELINE LLC

97 Cambridge Place | Bridgeport, WV 26330 | 304-626-7945

October 12, 2016

Jane Rucker, Town Treasurer
P.O. Box 66
Boones Mill, VA 24065

Re: MVP Traffic and Transportation Management Plan

Dear Jane Rucker, Town Treasurer,

Mountain Valley Pipeline, LLC (MVP) has developed a Traffic and Transportation Management plan for its Mountain Valley Pipeline Project. This plan details precautions and measures that will be taken by the MVP team and their contractors during the construction of the Project. Please find this plan enclosed for your review and comment.

Thank you for your consideration.

Trevor Leamon
Sr. Project Manager
Mountain Valley Pipeline, LLC
(724) 873-3474 | tleamon@eqt.com

Enclosures

Jane Rucker, Town Treasurer
(Boones Mill)
Traffic & Transportation Management
Control Plan Mailed 10-12-2016

U.S. Postal Service
Certified Mail Receipt

ARTICLE NUMBER
9414 7118 9956 4852 1787 35

ARTICLE ADDRESS TO:
Jane Rucker, Town Treasurer
P.O. Box 66
Boones Mill VA 24065-0066

FEES

Postage per piece	$1.36
Certified Fee	3.30
Return Receipt Fee	2.70
Total Postage & Fees:	**$7.36**

Postmark
Here

97 Cambridge Place | Bridgeport, WV 26330 | 304-626-7945

October 12, 2016

Josh Gibson, Town Planner
345 Donald Ave.
Rocky Mount, VA 24151

Re: MVP Traffic and Transportation Management Plan

Dear Josh Gibson, Town Planner,

Mountain Valley Pipeline, LLC (MVP) has developed a Traffic and Transportation Management plan for its Mountain Valley Pipeline Project. This plan details precautions and measures that will be taken by the MVP team and their contractors during the construction of the Project. Please find this plan enclosed for your review and comment.

Thank you for your consideration.

Trevor Leamon
Sr. Project Manager
Mountain Valley Pipeline, LLC
(724) 873-3474 | tleamon@eqt.com

Enclosures

Josh Gibson, Town Planner
(Rocky Mount)
Traffic & Transportation Management
Control Plan Mailed 10-12-2016

U.S. Postal Service
Certified Mail Receipt

ARTICLE NUMBER
9414 7118 9956 4852 1773 25

ARTICLE ADDRESS TO:
Josh Gibson, Town Planner
345 Donald Ave.
Rocky Mount VA 24151-1598

FEES

Postage per piece	$1.36
Certified Fee	3.30
Return Receipt Fee	2.70
Total Postage & Fees:	**$7.36**

Postmark
Here

97 Cambridge Place | Bridgeport, WV 26330 | 304-626-7945

October 12, 2016

Rodney Bryant, Director of Public Works
P.O. Box 370
Chatham, VA 24531

Re: MVP Traffic and Transportation Management Plan

Dear Rodney Bryant, Director of Public Works,

Mountain Valley Pipeline, LLC (MVP) has developed a Traffic and Transportation Management plan for its Mountain Valley Pipeline Project. This plan details precautions and measures that will be taken by the MVP team and their contractors during the construction of the Project. Please find this plan enclosed for your review and comment.

Thank you for your consideration.

Trevor Leamon
Sr. Project Manager
Mountain Valley Pipeline, LLC
(724) 873-3474 | tleamon@eqt.com

Enclosures

Rodney Bryant, Director of Public
Works
(Chatham)
Traffic & Transportation Management
Control Plan Mailed 10-12-2016

U.S. Postal Service
Certified Mail Receipt

ARTICLE NUMBER
9414 7118 9956 4852 1767 55

ARTICLE ADDRESS TO:
Rodney Bryant, Director of Public Works
P.O. Box 370
Chatham VA 24531-0370

FEES

Postage per piece	$1.36
Certified Fee	3.30
Return Receipt Fee	2.70
Total Postage & Fees:	**$7.36**

Postmark
Here

97 Cambridge Place | Bridgeport, WV 26330 | 304-626-7945

October 12, 2016

Virginia Department of Transportation
Salem District
Ashley Smith, Land Development Engineer
714 South Broad Street
Salem, VA 24153

Re: MVP Traffic and Transportation Management Plan

Dear Virginia Department of Transportation, Salem District, in the care of Ashley Smith, Land Development Engineer,

Mountain Valley Pipeline, LLC (MVP) has developed a Traffic and Transportation Management plan for its Mountain Valley Pipeline Project. This plan details precautions and measures that will be taken by the MVP team and their contractors during the construction of the Project. Please find this plan enclosed for your review and comment.

Thank you for your consideration.

Trevor Leamon
Sr. Project Manager
Mountain Valley Pipeline, LLC
(724) 873-3474 | tleamon@eqt.com

Enclosures

Virginia Department of Transportation, Salem District, in the care of Ashley Smith, Land Development Engineer
(Salem District)
Traffic & Transportation Management Control Plan Mailed 10-12-2016

U.S. Postal Service
Certified Mail Receipt

ARTICLE NUMBER
9414 7118 9956 4859 8469 41

ARTICLE ADDRESS TO:
Virginia Department of Transportation
Salem District
Ashley Smith, Land Development Enginner
714 South Broad Street
Salem VA 24153-5127

FEES

Postage per piece	$1.36
Certified Fee	3.30
Return Receipt Fee	2.70
Total Postage & Fees:	**$7.36**

Postmark
Here

97 Cambridge Place | Bridgeport, WV 26330 | 304-626-7945

October 12, 2016

Virginia Department of Transportation
Lynchburg District
Jay Craddock
19281 US Highway 29
Chatham, VA 24531

Re: MVP Traffic and Transportation Management Plan

Dear Virginia Department of Transportation, Lynchburg District, in the care of Jay Craddock,

Mountain Valley Pipeline, LLC (MVP) has developed a Traffic and Transportation Management plan for its Mountain Valley Pipeline Project. This plan details precautions and measures that will be taken by the MVP team and their contractors during the construction of the Project. Please find this plan enclosed for your review and comment.

Thank you for your consideration.

Trevor Leamon
Sr. Project Manager
Mountain Valley Pipeline, LLC
(724) 873-3474 | tleamon@eqt.com

Enclosures

Virginia Department of Transportation,
Lynchburg District, in the care of Jay Craddock
(Lynchburg District)
Traffic & Transportation Management Control
Plan Mailed 10-12-2016

U.S. Postal Service
Certified Mail Receipt

ARTICLE NUMBER
9414 7118 9956 4859 8738 86

ARTICLE ADDRESS TO:
Virginia Department of Transportation
Lynchburg District
Jay Craddock
19281 US Highway 29
Chatham VA 24531-5510

FEES

Postage per piece	$1.3
Certified Fee	3.3
Return Receipt Fee	2.7
Total Postage & Fees:	**$7.36**

Postmark
Here

97 Cambridge Place | Bridgeport, WV 26330 | 304-626-7945

October 12, 2016

Wayne Kessinger, Permit Section Administrator
Building Five, Room 356
1900 Kanawha Boulevard East
Charleston, WV 25305-0430

Re: MVP Traffic and Transportation Management Plan

Dear Wayne Kessinger, Permit Section Administrator,

Mountain Valley Pipeline, LLC (MVP) has developed a Traffic and Transportation Management plan for its Mountain Valley Pipeline Project. This plan details precautions and measures that will be taken by the MVP team and their contractors during the construction of the Project. Please find this plan enclosed for your review and comment.

Thank you for your consideration.

Trevor Leamon
Sr. Project Manager
Mountain Valley Pipeline, LLC
(724) 873-3474 | tleamon@eqt.com

Enclosures

Wayne Kessinger, Permit Section
Administrator
(WV DOT)
Traffic & Transportation Management
Control Plan Mailed 10-12-2016

U.S. Postal Service
Certified Mail Receipt

ARTICLE NUMBER
9414 7118 9956 4852 1713 09

ARTICLE ADDRESS TO:
Wayne Kessinger, Permit Section Administrator
Building Five, Room 356
1900 Kanawha Boulevard East
Charleston WV 25305-0430

FEES

Postage per piece	$1.36
Certified Fee	3.30
Return Receipt Fee	2.70
Total Postage & Fees:	**$7.36**

Postmark
Here

97 Cambridge Place | Bridgeport, WV 26330 | 304-626-7945

October 12, 2016

WV DOH District 4
C/O Gary Clayton
Statewide Oil and Gas Coordinator
P.O. Box 4220
Clarksburg, WV 26302

Re: MVP Traffic and Transportation Management Plan

Dear WV DOH District 4, in the care of Gary Clayton,

Mountain Valley Pipeline, LLC (MVP) has developed a Traffic and Transportation Management plan for its Mountain Valley Pipeline Project. This plan details precautions and measures that will be taken by the MVP team and their contractors during the construction of the Project. Please find this plan enclosed for your review and comment.

Thank you for your consideration.

Trevor Leamon
Sr. Project Manager
Mountain Valley Pipeline, LLC
(724) 873-3474 | tleamon@eqt.com

Enclosures

WV DOH District 4, in the care of Gary
Clayton
(WV DOT)
Traffic & Transportation Management
Control Plan Mailed 10-12-2016

U.S. Postal Service
Certified Mail Receipt

ARTICLE NUMBER
9414 7118 9956 4852 1991 12

ARTICLE ADDRESS TO:
WV DOH District 4
C/O Gary Clayton
Statewide Oil and Gas Coordinator
P.O. Box 4220
Clarksburg WV 26302-4220

FEES

Postage per piece	$1.36
Certified Fee	3.30
Return Receipt Fee	2.70
Total Postage & Fees:	**$7.36**

Postmark
Here

97 Cambridge Place | Bridgeport, WV 26330 | 304-626-7945

October 12, 2016

Lawrence Lemon, County Commissioner
P.O. Box 156
New Martinsville, WV 26155

Re: MVP Traffic and Transportation Management Plan

Dear Lawrence Lemon, County Commissioner,

Mountain Valley Pipeline, LLC (MVP) has developed a Traffic and Transportation Management plan for its Mountain Valley Pipeline Project. This plan details precautions and measures that will be taken by the MVP team and their contractors during the construction of the Project. Please find this plan enclosed for your review and comment.

Thank you for your consideration.

Trevor Leamon
Sr. Project Manager
Mountain Valley Pipeline, LLC
(724) 873-3474 | tleamon@eqt.com

Enclosures

Lawrence Lemon, County
Commissioner
(Wetzel)
Traffic & Transportation Management
Control Plan Mailed 10-12-2016

U.S. Postal Service
Certified Mail Receipt

ARTICLE NUMBER
9414 7118 9956 4852 1995 63

ARTICLE ADDRESS TO:
Lawrence Lemon, County Commissioner
P.O. Box 156
New Martinsville WV 26155-0156

FEES

Postage per piece	$1.36
Certified Fee	3.30
Return Receipt Fee	2.70
Total Postage & Fees:	**$7.36**

Postmark
Here

97 Cambridge Place | Bridgeport, WV 26330 | 304-626-7945

October 12, 2016

Linda Cross, Deputy Director of Planning Commission
Harrison County Courthouse
301 West Main Street
6th Floor
Clarksburg, WV 26301

Re: MVP Traffic and Transportation Management Plan

Dear Linda Cross, Deputy Director of Planning Commission,

Mountain Valley Pipeline, LLC (MVP) has developed a Traffic and Transportation Management plan for its Mountain Valley Pipeline Project. This plan details precautions and measures that will be taken by the MVP team and their contractors during the construction of the Project. Please find this plan enclosed for your review and comment.

Thank you for your consideration.

Trevor Leamon
Sr. Project Manager
Mountain Valley Pipeline, LLC
(724) 873-3474 | tleamon@eqt.com

Enclosures

Linda Cross, Deputy Director of
Planning Commission
(Harrison)
Traffic & Transportation Management
Control Plan Mailed 10-12-2016

U.S. Postal Service
Certified Mail Receipt

ARTICLE NUMBER
9414 7118 9956 4852 1926 63

ARTICLE ADDRESS TO:
Linda Cross, Deputy Director of Planning Commission
Harrison County Courthouse
6th Floor
301 W Main St
Clarksburg WV 26301-2955

FEES

Postage per piece	$1.36
Certified Fee	3.30
Return Receipt Fee	2.70
Total Postage & Fees:	**$7.36**

Postmark
Here

97 Cambridge Place | Bridgeport, WV 26330 | 304-626-7945

October 12, 2016

George Eidel, OES Manager
Doddridge County Courthouse
108 Court Street
West Union, WV 26456

Re: MVP Traffic and Transportation Management Plan

Dear George Eidel, OES Manager,

Mountain Valley Pipeline, LLC (MVP) has developed a Traffic and Transportation Management plan for its Mountain Valley Pipeline Project. This plan details precautions and measures that will be taken by the MVP team and their contractors during the construction of the Project. Please find this plan enclosed for your review and comment.

Thank you for your consideration.

Trevor Leamon
Sr. Project Manager
Mountain Valley Pipeline, LLC
(724) 873-3474 | tleamon@eqt.com

Enclosures

George Eidel, OES Manager
(Doddridge)
Traffic & Transportation Management
Control Plan Mailed 10-12-2016

U.S. Postal Service
Certified Mail Receipt

ARTICLE NUMBER
9414 7118 9956 4852 1902 25

ARTICLE ADDRESS TO:
George Eidel, OES Manager
Doddridge County Courthouse
108 Court Street
West Union WV 26456-2001

FEES

Postage per piece	$1.36
Certified Fee	3.30
Return Receipt Fee	2.70
Total Postage & Fees:	**$7.36**

Postmark
Here

97 Cambridge Place | Bridgeport, WV 26330 | 304-626-7945

October 12, 2016

Cindy Whetshell, County Administrator
110 Center Avenue
2nd floor
Weston, WV 26452

Re: MVP Traffic and Transportation Management Plan

Dear Cindy Whetshell, County Administrator,

Mountain Valley Pipeline, LLC (MVP) has developed a Traffic and Transportation Management plan for its Mountain Valley Pipeline Project. This plan details precautions and measures that will be taken by the MVP team and their contractors during the construction of the Project. Please find this plan enclosed for your review and comment.

Thank you for your consideration.

Trevor Leamon
Sr. Project Manager
Mountain Valley Pipeline, LLC
(724) 873-3474 | tleamon@eqt.com

Enclosures

Cindy Whetshell, County Administrator
(Lewis)
Traffic & Transportation Management
Control Plan Mailed 10-12-2016

U.S. Postal Service
Certified Mail Receipt

ARTICLE NUMBER
9414 7118 9956 4852 1985 80

ARTICLE ADDRESS TO:
Cindy Whetshell, County Administrator
2nd Floor
110 Center Avenue
Weston WV 26452-1964

FEES

Postage per piece	$1.36
Certified Fee	3.30
Return Receipt Fee	2.70
Total Postage & Fees:	**$7.36**

Postmark
Here

97 Cambridge Place | Bridgeport, WV 26330 | 304-626-7945

October 12, 2016

Edie Tichner, Administrative Assistant
501 Main Street
Sutton, WV 26601-1320

Re: MVP Traffic and Transportation Management Plan

Dear Edie Tichner, Administrative Assistant,

Mountain Valley Pipeline, LLC (MVP) has developed a Traffic and Transportation Management plan for its Mountain Valley Pipeline Project. This plan details precautions and measures that will be taken by the MVP team and their contractors during the construction of the Project. Please find this plan enclosed for your review and comment.

Thank you for your consideration.

Trevor Leamon
Sr. Project Manager
Mountain Valley Pipeline, LLC
(724) 873-3474 | tleamon@eqt.com

Enclosures

Edie Tichner, Administrative Assistant
(Braxton)
Traffic & Transportation Management
Control Plan Mailed 10-12-2016

U.S. Postal Service
Certified Mail Receipt

ARTICLE NUMBER
9414 7118 9956 4852 1979 34

ARTICLE ADDRESS TO:
Edie Tichner, Administrative Assistant
501 Main Street
Sutton WV 26601-1320

FEES

Postage per piece	$1.36
Certified Fee	3.30
Return Receipt Fee	2.70
Total Postage & Fees:	**$7.36**

Postmark
Here

97 Cambridge Place | Bridgeport, WV 26330 | 304-626-7945

October 12, 2016

Traci Dean, County Administrator/Floodplain Manager
2 Court Square
Webster Springs, WV 26288

Re: MVP Traffic and Transportation Management Plan

Dear Traci Dean, County Administrator/Floodplain Manager,

Mountain Valley Pipeline, LLC (MVP) has developed a Traffic and Transportation Management plan for its Mountain Valley Pipeline Project. This plan details precautions and measures that will be taken by the MVP team and their contractors during the construction of the Project. Please find this plan enclosed for your review and comment.

Thank you for your consideration.

Trevor Leamon
Sr. Project Manager
Mountain Valley Pipeline, LLC
(724) 873-3474 | tleamon@eqt.com

Enclosures

Traci Dean, County
Administrator/Floodplain Manager
(Webster)
Traffic & Transportation Management
Control Plan Mailed 10-12-2016

U.S. Postal Service
Certified Mail Receipt

ARTICLE NUMBER
9414 7118 9956 4852 1966 09

ARTICLE ADDRESS TO:
Traci Dean, County Administrator/Floodplain Manager
2 Court Square
Webster Springs WV 26288-1049

FEES

Postage per piece	$1.36
Certified Fee	3.30
Return Receipt Fee	2.70
Total Postage & Fees:	**$7.36**

Postmark
Here

97 Cambridge Place | Bridgeport, WV 26330 | 304-626-7945

October 12, 2016

County Maintenance Assistant Supervisor
777 Turnpike Road
Summersville, WV 26551

Re: MVP Traffic and Transportation Management Plan

Dear County Maintenance Assistant Supervisor,

Mountain Valley Pipeline, LLC (MVP) has developed a Traffic and Transportation Management plan for its Mountain Valley Pipeline Project. This plan details precautions and measures that will be taken by the MVP team and their contractors during the construction of the Project. Please find this plan enclosed for your review and comment.

Thank you for your consideration.

Trevor Leamon
Sr. Project Manager
Mountain Valley Pipeline, LLC
(724) 873-3474 | tleamon@eqt.com

Enclosures

County Maintenance Assistant
Supervisor
(Nicholas)
Traffic & Transportation Management
Control Plan Mailed 10-12-2016

U.S. Postal Service
Certified Mail Receipt

ARTICLE NUMBER
9414 7118 9956 4852 1919 25

ARTICLE ADDRESS TO:
County Maintenance Assistant Supervisor
777 Turnpike Road
Summersville WV 26651-9779

FEES

Postage per piece	$1.36
Certified Fee	3.30
Return Receipt Fee	2.70
Total Postage & Fees:	**$7.36**

Postmark
Here

Mountain Valley PIPELINE LLC

97 Cambridge Place | Bridgeport, WV 26330 | 304-626-7945

October 12, 2016

Kelly Banton, Commission Assistant
Greenbrier County Courthouse
200 Court Street N
Lewisburg, WV 24901

Re: MVP Traffic and Transportation Management Plan

Dear Kelly Banton, Commission Assistant,

Mountain Valley Pipeline, LLC (MVP) has developed a Traffic and Transportation Management plan for its Mountain Valley Pipeline Project. This plan details precautions and measures that will be taken by the MVP team and their contractors during the construction of the Project. Please find this plan enclosed for your review and comment.

Thank you for your consideration.

Trevor Leamon
Sr. Project Manager
Mountain Valley Pipeline, LLC
(724) 873-3474 | tleamon@eqt.com

Enclosures

Kelly Banton, Commission Assistant
(Greenbrier)
Traffic & Transportation Management
Control Plan Mailed 10-12-2016

U.S. Postal Service
Certified Mail Receipt

ARTICLE NUMBER
9414 7118 9956 4852 1297 13

ARTICLE ADDRESS TO:
Kelly Banton, Commission Assistant
Greenbrier County Courthouse
200 N Court Street
Lewisburg WV 24901-1170

FEES

Postage per piece	$1.36
Certified Fee	3.30
Return Receipt Fee	2.70
Total Postage & Fees:	**$7.36**

Postmark
Here

97 Cambridge Place | Bridgeport, WV 26330 | 304-626-7945

October 12, 2016

Tim Richardson, Zoning Enforcement Officer
PO Box 307
Fayetteville, WV 25840

Re: MVP Traffic and Transportation Management Plan

Dear Tim Richardson, Zoning Enforcement Officer,

Mountain Valley Pipeline, LLC (MVP) has developed a Traffic and Transportation Management plan for its Mountain Valley Pipeline Project. This plan details precautions and measures that will be taken by the MVP team and their contractors during the construction of the Project. Please find this plan enclosed for your review and comment.

Thank you for your consideration.

Trevor Leamon
Sr. Project Manager
Mountain Valley Pipeline, LLC
(724) 873-3474 | tleamon@eqt.com

Enclosures

Tim Richardson, Zoning Enforcement
Officer
(Fayette)
Traffic & Transportation Management
Control Plan Mailed 10-12-2016

U.S. Postal Service
Certified Mail Receipt

ARTICLE NUMBER
9414 7118 9956 4852 1232 47

ARTICLE ADDRESS TO:
Tim Richardson, Zoning Enforcement Officer
PO Box 307
Fayetteville WV 25840-0307

FEES

Postage per piece	$1.36
Certified Fee	3.30
Return Receipt Fee	2.70
Total Postage & Fees:	**$7.36**

Postmark
Here

97 Cambridge Place | Bridgeport, WV 26330 | 304-626-7945

October 12, 2016

Greg Bandall, County Assessor
Summers County Courthouse
451 1st Avenue, Suite 102
Hinton, WV 25951

Re: MVP Traffic and Transportation Management Plan

Dear Greg Bandall, County Assessor,

Mountain Valley Pipeline, LLC (MVP) has developed a Traffic and Transportation Management plan for its Mountain Valley Pipeline Project. This plan details precautions and measures that will be taken by the MVP team and their contractors during the construction of the Project. Please find this plan enclosed for your review and comment.

Thank you for your consideration.

Trevor Leamon
Sr. Project Manager
Mountain Valley Pipeline, LLC
(724) 873-3474 | tleamon@eqt.com

Enclosures

Greg Bandall, County Assessor
(Summers)
Traffic & Transportation Management
Control Plan Mailed 10-12-2016

U.S. Postal Service
Certified Mail Receipt

ARTICLE NUMBER
9414 7118 9956 4852 1231 48

ARTICLE ADDRESS TO:
Greg Bandall, County Assessor
Summers County Courthouse
451 1st Avenue, Suite 102
Hinton WV 25951-2701

FEES

Postage per piece	$1.36
Certified Fee	3.30
Return Receipt Fee	2.70
Total Postage & Fees:	**$7.36**

Postmark
Here

97 Cambridge Place | Bridgeport, WV 26330 | 304-626-7945

October 12, 2016

Donald Evans, County Clerk
Monroe County Courthouse
PO Box 350
Union, WV 24983

Re: MVP Traffic and Transportation Management Plan

Dear Donald Evans, County Clerk,

Mountain Valley Pipeline, LLC (MVP) has developed a Traffic and Transportation Management plan for its Mountain Valley Pipeline Project. This plan details precautions and measures that will be taken by the MVP team and their contractors during the construction of the Project. Please find this plan enclosed for your review and comment.

Thank you for your consideration.

Trevor Leamon
Sr. Project Manager
Mountain Valley Pipeline, LLC
(724) 873-3474 | tleamon@eqt.com

Enclosures

Donald Evans, County Clerk
(Monroe)
Traffic & Transportation Management
Control Plan Mailed 10-12-2016

U.S. Postal Service
Certified Mail Receipt

ARTICLE NUMBER
9414 7118 9956 4852 1248 55

ARTICLE ADDRESS TO:
Donald Evans, County Clerk
Monroe County Courthouse
PO Box 350
Union WV 24983-0350

FEES

Postage per piece	$1.36
Certified Fee	3.30
Return Receipt Fee	2.70
Total Postage & Fees:	**$7.36**

Postmark
Here

97 Cambridge Place | Bridgeport, WV 26330 | 304-626-7945

October 12, 2016

Town of Smithfield
PO Box 67
Smithfield, WV 26437

Re: MVP Traffic and Transportation Management Plan

Dear Town of Smithfield,

Mountain Valley Pipeline, LLC (MVP) has developed a Traffic and Transportation Management plan for its Mountain Valley Pipeline Project. This plan details precautions and measures that will be taken by the MVP team and their contractors during the construction of the Project. Please find this plan enclosed for your review and comment.

Thank you for your consideration.

Trevor Leamon
Sr. Project Manager
Mountain Valley Pipeline, LLC
(724) 873-3474 | tleamon@eqt.com

Enclosures

Town of Smithfield
(Smithfield (town))
Traffic & Transportation Management
Control Plan Mailed 10-12-2016

U.S. Postal Service
Certified Mail Receipt

ARTICLE NUMBER
9414 7118 9956 4852 1244 66

ARTICLE ADDRESS TO:
Town of Smithfield
PO Box 67
Smithfield WV 26437-0067

FEES

Postage per piece	$1.36
Certified Fee	3.30
Return Receipt Fee	2.70
Total Postage & Fees:	**$7.36**

Postmark
Here

97 Cambridge Place | Bridgeport, WV 26330 | 304-626-7945

October 12, 2016

City of Salem
Ronnie Davis, City Manager
PO Box 352
Salem, WV 26426

Re: MVP Traffic and Transportation Management Plan

Dear Ronnie Davis, City Manager,

Mountain Valley Pipeline, LLC (MVP) has developed a Traffic and Transportation Management plan for its Mountain Valley Pipeline Project. This plan details precautions and measures that will be taken by the MVP team and their contractors during the construction of the Project. Please find this plan enclosed for your review and comment.

Thank you for your consideration.

Trevor Leamon
Sr. Project Manager
Mountain Valley Pipeline, LLC
(724) 873-3474 | tleamon@eqt.com

Enclosures

Ronnie Davis, City Manager
(Salem (city))
Traffic & Transportation Management
Control Plan Mailed 10-12-2016

U.S. Postal Service
Certified Mail Receipt

ARTICLE NUMBER
9414 7118 9956 4852 1632 43

ARTICLE ADDRESS TO:
City of Salem
Ronnie Davis, City Manager
PO Box 352
Salem WV 26426-0352

FEES

Postage per piece	$1.36
Certified Fee	3.30
Return Receipt Fee	2.70
Total Postage & Fees:	**$7.36**

Postmark
Here

97 Cambridge Place | Bridgeport, WV 26330 | 304-626-7945

October 12, 2016

Town of Cowen
Tammy Crue, Mayor
PO Box 446
Cowen, WV 26206

Re: MVP Traffic and Transportation Management Plan

Dear Tammy Crue, Mayor,

Mountain Valley Pipeline, LLC (MVP) has developed a Traffic and Transportation Management plan for its Mountain Valley Pipeline Project. This plan details precautions and measures that will be taken by the MVP team and their contractors during the construction of the Project. Please find this plan enclosed for your review and comment.

Thank you for your consideration.

Trevor Leamon
Sr. Project Manager
Mountain Valley Pipeline, LLC
(724) 873-3474 | tleamon@eqt.com

Enclosures

Tammy Crue, Mayor
(Cowen (town))
Traffic & Transportation Management
Control Plan Mailed 10-12-2016

U.S. Postal Service
Certified Mail Receipt

ARTICLE NUMBER
9414 7118 9956 4852 1630 69

ARTICLE ADDRESS TO:
Town of Cowen
Tammy Crue, Mayor
PO Box 446
Cowen WV 26206-0446

FEES

Postage per piece	$1.36
Certified Fee	3.30
Return Receipt Fee	2.70
Total Postage & Fees:	**$7.36**

Postmark
Here

97 Cambridge Place | Bridgeport, WV 26330 | 304-626-7945

October 12, 2016

Town of Camden-On-Gauley
Lisa Prather, Mayor
PO Box 300
Camden-On-Gauley, WV 26208

Re: MVP Traffic and Transportation Management Plan

Dear Lisa Prather, Mayor,

Mountain Valley Pipeline, LLC (MVP) has developed a Traffic and Transportation Management plan for its Mountain Valley Pipeline Project. This plan details precautions and measures that will be taken by the MVP team and their contractors during the construction of the Project. Please find this plan enclosed for your review and comment.

Thank you for your consideration.

Trevor Leamon
Sr. Project Manager
Mountain Valley Pipeline, LLC
(724) 873-3474 | tleamon@eqt.com

Enclosures

Lisa Prather, Mayor
(Camden-on-Gauley (town))
Traffic & Transportation Management
Control Plan Mailed 10-12-2016

U.S. Postal Service
Certified Mail Receipt

ARTICLE NUMBER
9414 7118 9956 4852 1649 05

ARTICLE ADDRESS TO:
Town of Camden-On-Gauley
Lisa Prather, Mayor
PO Box 300
Camden On Gauley WV 26208-0300

FEES

Postage per piece	$1.36
Certified Fee	3.30
Return Receipt Fee	2.70
Total Postage & Fees:	**$7.36**

Postmark
Here

97 Cambridge Place | Bridgeport, WV 26330 | 304-626-7945

October 12, 2016

Eddie Midkiff, Town Recorder
201 Kanawha Avenue
Rainelle, WV 25962

Re: MVP Traffic and Transportation Management Plan

Dear Eddie Midkiff, Town Recorder,

Mountain Valley Pipeline, LLC (MVP) has developed a Traffic and Transportation Management plan for its Mountain Valley Pipeline Project. This plan details precautions and measures that will be taken by the MVP team and their contractors during the construction of the Project. Please find this plan enclosed for your review and comment.

Thank you for your consideration.

Trevor Leamon
Sr. Project Manager
Mountain Valley Pipeline, LLC
(724) 873-3474 | tleamon@eqt.com

Enclosures

Eddie Midkiff, Town Recorder
(Quinwood (town))
Traffic & Transportation Management
Control Plan Mailed 10-12-2016

U.S. Postal Service
Certified Mail Receipt

ARTICLE NUMBER
9414 7118 9956 4852 4187 87

ARTICLE ADDRESS TO:
Eddie Midkiff, Town Recorder
1233 Kanawha Ave
Rainelle WV 25962-7121

FEES

Postage per piece	$1.36
Certified Fee	3.30
Return Receipt Fee	2.70
Total Postage & Fees:	**$7.36**

Postmark
Here

97 Cambridge Place | Bridgeport, WV 26330 | 304-626-7945

October 12, 2016

Town of Rupert
Jim Nichols, Mayor
P.O. Drawer B
Rupert, WV 25984

Re: MVP Traffic and Transportation Management Plan

Dear Jim Nichols, Mayor,

Mountain Valley Pipeline, LLC (MVP) has developed a Traffic and Transportation Management plan for its Mountain Valley Pipeline Project. This plan details precautions and measures that will be taken by the MVP team and their contractors during the construction of the Project. Please find this plan enclosed for your review and comment.

Thank you for your consideration.

Trevor Leamon
Sr. Project Manager
Mountain Valley Pipeline, LLC
(724) 873-3474 | tleamon@eqt.com

Enclosures

Jim Nichols, Mayor
(Rupert (town))
Traffic & Transportation Management
Control Plan Mailed 10-12-2016

U.S. Postal Service
Certified Mail Receipt

ARTICLE NUMBER
9414 7118 9956 4852 4170 63

ARTICLE ADDRESS TO:
Town of Rupert
Jim Nichols, Mayor
P.O. Box B
Rupert WV 25984-0199

FEES

Postage per piece	$1.36
Certified Fee	3.30
Return Receipt Fee	2.70
Total Postage & Fees:	**$7.36**

Postmark
Here

97 Cambridge Place | Bridgeport, WV 26330 | 304-626-7945

October 12, 2016

Craig County Administration Building
Clay Goodman, Zoning Administrator
PO Box 308
New Castle, VA 24127

Re: MVP Traffic and Transportation Management Plan

Dear Clay Goodman, Zoning Administrator,

Mountain Valley Pipeline, LLC (MVP) has developed a Traffic and Transportation Management plan for its Mountain Valley Pipeline Project. This plan details precautions and measures that will be taken by the MVP team and their contractors during the construction of the Project. Please find this plan enclosed for your review and comment.

Thank you for your consideration.

Trevor Leamon
Sr. Project Manager
Mountain Valley Pipeline, LLC
(724) 873-3474 | tleamon@eqt.com

Enclosures

Clay Goodman, Zoning Administrator
(Craig)
Traffic & Transportation Management
Control Plan Mailed 10-12-2016

U.S. Postal Service
Certified Mail Receipt

ARTICLE NUMBER
9414 7118 9956 4859 8751 49

ARTICLE ADDRESS TO:
Craig County Administration Building
Clay Goodman, Zoning Administrator
PO Box 308
New Castle VA 24127-0308

FEES

Postage per piece	$1.36
Certified Fee	3.30
Return Receipt Fee	2.70
Total Postage & Fees:	**$7.36**

Postmark
Here

Responses to Data Requests

Attachment DR2 General-7c1

Mountain Valley Pipeline Project

Docket No. CP16-10-000

Landslide Mitigation Plan

Rev. 2, October 2016

(Updates from previous reports highlighted in yellow.)

Table of Contents

1.0 INTRODUCTION 1
2.0 FIELD INSPECTION 1
3.0 SLOPE EVALUATIONS 1
4.0 STEEP SLOPES AND RED SHALE 5
5.0 POTENTIAL MITIGATION MEASURES 9
6.0 MAINTENANCE AND MONITORING 10
7.0 SIDEHILL CONSTRUCTION 10
8.0 SITE SPECIFIC MITIGATION 11
9.0 ADDITIONAL AREAS OF CONCERN 24
9.1 PETERS MOUNTAIN, SINKING CREEK MOUNTAIN, BRUSH MOUNTAIN, AND GILES COUNTY SEISMIC ZONE 24
9.2 DEBRIS FLOW POTENTIAL ALONG KIMBALLTON BRANCH 25
10.0 REFERENCES 25

List of Tables

Table 1 - Landslide Concern Areas Crossed by the MVP Pipeline 3

List of Figures

Figure 1 – Shale Bedrock Areas 9

Appendix

Landslide Mitigation Plan Typical Detail Drawings

1.0 INTRODUCTION

The Mountain Valley Pipeline (MVP) Project is a proposed 42-inch-diameter natural gas pipeline system that spans approximately 303 miles from northwestern West Virginia (Wetzel County) to southern Virginia (Pittsylvania County). The Project will be constructed and owned by Mountain Valley Pipeline LLC, which is a joint venture of EQT Corporation, NextEra Energy, Inc., Con Edison Gas Midstream, LLC, WGL Holdings, Inc., Vega Energy Partners, Ltd., and RGC Midstream, LLC.

Many portions of the proposed Mountain Valley Pipeline Project (Project) route are in landslide susceptible areas as mentioned in Section 6.6 of Resource Report 6 (Ref. 1) and as shown on Figure 6.4-3 of the same report. Slope information along the Project is provided in Resource Report 1, Appendix 1-I. Landslides in the Project area occur primarily in weathered bedrock or colluvial soil and within old landslide debris located on steep slopes. Numerous landslides on the Appalachian Plateau have developed in soils derived from sedimentary rocks. Shale, especially red beds and shale-limestone sequences, disintegrate rapidly into clayey soil upon exposure. Most landslides involving soil and weathered bedrock consist of smooth, integrated, thin earth-flow slabs that may be many square yards in area but generally are less than about eight feet thick. Commonly, the slabs move no faster than about three feet or six feet per year and are normally underlain by material containing water with a hydrostatic head of as much as seven feet. In both the folded Appalachians and the Blue Ridge Mountains, numerous slow-moving debris slides form in colluvial soil and scree that are particularly abundant on slopes underlain by sandstone and metamorphic rocks.

MVP has performed a review of potential areas of landslide or rockfall concern along the pipeline alignment. This was completed through review of available historic aerial photographs, soils data, and topographic maps to identify indications of potential landslide hazards. Areas investigated as part of this report are shown on the project alignment sheets and erosion and sediment control plans.

MVP has developed this Landslide Mitigation Plan to outline the special procedures and best management practices (BMPs) that will be implemented during the pipeline installation and post-construction periods to mitigate landslide occurrence.

All mileposts (MP) reference herein refer to the October 2016 Proposed Route unless otherwise specified.

2.0 FIELD INSPECTION

MVP has completed field observations of the steep sidehill slope sites where potential stability issues were identified, as summarized Table 1 of this document. The field observations for these sites included slope characteristics, GPS mapping of observed slides, slumps, rockfalls, scarp locations, and the presence of geotropically affected trees, drainage features, and gullying. In 2015, investigations were conducted by a consulting geotechnical engineer with experience in landslide evaluation, whose resume is attached. In 2016, additional site visits were conducted by MVP personnel with experience in landslide evaluation.

3.0 SLOPE EVALUATIONS

The occurrence of a landslide is dependent on a combination of site-specific conditions and influencing factors. Common factors that contribute to landslides principally fall into four broad categories (WSDOT 2014):

- Climatic/hydrologic (rainfall or precipitation)

- Geomorphic (slope form and conditions)
- Geologic/geotechnical/hydrogeological (material type and groundwater)
- Human activity

Climatic factors that influence landslides include the duration of rainfall events, intensity of rainfall, type of precipitation (rain or snow), and rainfall conditions over a period of time (antecedent conditions). It is common for landslides to occur after intense or prolonged periods of rain. Some episodes of widespread landslide occurrences correspond to storms that involve the rapid melting of previously accumulated snow by wind and warm rain. The most disastrous landslide events in the Appalachian Plateau region have been associated with persistent rainfall followed by a heavy downpour along steep slopes which causes debris flows and debris avalanches. Debris flows develop on steep slopes as a result of heavy rainfall that saturates the soil, which under the extra weight and lubrication breaks loose and becomes slurry that pulls surface vegetation and large trees downslope. Infiltration of precipitation into surface soils was considered in the mitigation measures presented in this report.

Geomorphic factors that affect slope stability include height and steepness, as well as vegetation and underlying geology. Increased steepness, concave topographic slopes and slope height generally correlate with reduced stability. A lack of vegetative cover will also increase the amount of rainfall that can infiltrate the slope surface. Vegetation generally inhibits surface soil erosion with erosion occurring much more rapidly on bare slopes. Whether water infiltrates into the ground or runs off is influenced by both surface vegetation and the permeability of the geologic substrate, its degree of saturation, and precipitation intensity. Either shallow bedrock conditions or a compact and fine-grained soil unit at depth will tend to cause a saturation and weakening of the near-surface, loosened soil. The approximate depth to bedrock along the pipeline is indicated in Resource Report 6, Appendix 6-B.

As mentioned in Section 1.0, the geologic and geotechnical characteristics of the region contribute to slope instability. Landslides along the project route will occur primarily in weathered bedrock or loose colluvial soil and within old landslide debris located on steep slopes. Exposed sedimentary rock formations can erode rapidly and create soils prone to landslides. Most landslides along the route are expected to be thin earth-flow type slabs rather than deep-seated circular failures. Rockfalls are also a potential hazard below bedrock outcroppings at or near the top of steep slopes associated with the cliff-forming formations such as sandstones, granite, and gneiss. These outcrops may be weathered by wind or rainfall and become loosened, leading to a violent cascade downhill, often triggering a larger landslide. Landslides also commonly recur in the same areas, thus evidence of previous events is important to the slope evaluations. Areas of high groundwater table and surface drainage paths can also contribute to the instability of slopes. Drainage paths or streams can over-steepen slopes from erosion. If known, the Hydrologic Soil Group for the surface soils is indicated in the site description. Hydrologic soil groupings are used to describe the minimum rate of infiltration obtained for bare soils after prolonged wetting.

Human activities are a common contributor to landslide events. Large excavations and fills located in mountainous areas related to rural development have increased the number of and potential for landslides. Development of this type tends to create over-steepened slopes and drainage alteration that leads to the potential for many landslides. The removal of surface vegetation during land development can affect slope stability through increased infiltration of rainfall.

Table 1 contains descriptive notes for each of the 37 slope areas of concern along the pipeline. These descriptions were obtained from Table 6.4-6 and augmented with notes from the field surveys, where

possible. In addition, three areas within Jefferson National Forest (JNF), at the request of JNF personnel, and several areas identified in realigned areas of the route were also investigated and included in Table 1.

	Table 1 - Landslide Concern Areas Crossed by the MVP Pipeline					
Designation	**Beginning MP**	**Ending MP**	**Length Crossed (feet)**	**Slope (%) [a]**	**Signs of Recent Movement [b]**	**Notes [c]**
MVP-LMP-WE-01	3.3	3.8	2147	33	No*	Dormant slide and/or soil prone to movement. Intersects at least three natural drains.
MVP-LMP-HA-02	28.0	28.2	967	29	No*	Near well appurtenances. Side cut would run across at least three natural drains.
MVP-LMP-DO-03	32.4	32.6	749	32	No*	Dormant slide and/or soil prone to movement. Located at toe of slope. Hillside previously cleared.
MVP-LMP-HA-04	33.4	33.6	570	42	No*	Dormant slide and/or soil prone to movement. Located at toe of slope. Hillside previously cleared.
MVP-LMP-DO-05	34.2	34.4	377	28	No*	Moderate side slope, includes slight pipe bend. Cuts across at least one natural drain.
MVP-LMP-DO-06	34.4	34.6	907	28	No*	Downslope of ridge. Cuts across at least three, possibly four or five natural drains and one or two four-wheeler paths.
MVP-LMP-DO-07	35.1	35.4	869	40	No*	Construction equipment may need to be staged on sidehill here. Southeastern side less steep, may be better to stage.
MVP-LMP-LE-08	43.3	43.5	494	30	No*	Steep side slope, but ridge within right-of-way.
MVP-LMP-LE-09	46.2	46.5	1113	15-33	Yes*	Gravitropism and natural drains on a moderate side slope.
MVP-LMP-LE-10	46.6	46.8	448	36	Yes*	Existing dormant slide possibly upslope, and active within past twenty years. Cuts across at least one natural drain, possibly two.
MVP-LMP-LE-11	53.0	53.3	872	22	No*	Adjacent slopes composed of dormant slides. Moderate side slope directly below cemetery. Cuts across some kind of existing right-of-way or road, and at least two natural drains.
MVP-LMP-LE-12	55.1	55.2	224	35	No*	Moderate side slope, cuts across toe of slope. No signs of recent movement.
MVP-LMP-LE-13	57.2	57.7	806	18 - 40	No*	Right-of-way will run alongside hill with 32% grade and a 40% grade directly below it.
MVP-LMP-BR-14	66.8	67.0	826	15-34	No*	Moderate side slope subjacent to Weston and Gauley Bridge Turnpike Trail.
MVP-LMP-BR-15	69.2	69.5	1128	29	No*	Cuts across one large natural drainage. No signs of recent movement.
MVP-LMP-WB-16	81.8	82.1	1462	35	No*	Route crosses dormant slide area. Moderate side slope. No natural drains, but is directly above house or farm structure. Landowner issues may force it to be on the east side below the road, intersecting at least three natural drains.

	Table 1 - Landslide Concern Areas Crossed by the MVP Pipeline					
Designation	**Beginning MP**	**Ending MP**	**Length Crossed (feet)**	**Slope (%) [a]**	**Signs of Recent Movement [b]**	**Notes [c]**
MVP-LMP-WB-17	82.5	82.6	602	45	No*	Route cuts through a colluvial slope which is very prone to sliding. Very steep side slope, right above ravine, possibly crossing one natural drain.
MVP-LMP-NI-18	111.7†	111.8†	231	12 – 39	No	Moderately steep slope. Pipeline cuts through either dormant slide or slide-prone material. Not included in October 2016 Proposed Route.
MVP-LMP-NI-19	122.5	123.0	2547	7 – 43	No*	Crosses at least 5 streams or natural drains. Cuts through dormant slide or material prone to sliding.
MVP-LMP-NI-20	123.1	123.2	362	22	No*	Route crosses soil prone to movement. Mild side slope directly below power line right-of-way. Cuts across one natural drain.
MVP-LMP-NI-21	124.3	124.8	648	15 - 20	Yes*	Possible recent landslides, and this portion of route crosses through soil prone to movement.
MVP-LMP-NI-22	127.2	127.4	631	12 – 39	No*	Moderately steep slope below ridge. Cuts through dormant slide or material prone to sliding. Crosses an existing logging road.
MVP-LMP-NI-23	127.9	128.0	423	10 – 60	No*	Moderately steep slope below point. Cuts through dormant slide or material prone to sliding.
MVP-LMP-NI-24	132.0	132.1	646	25	No*	Portion of route is adjacent to soil prone to movement to the west and a dormant slide to the east. Moderate side slope. Cuts across at least one natural drain.
MVP-LMP-GB-25	145.3	146.1	8000	30 - 35	No*	Steep and very long side slope. Cuts across at least 3 natural drains. Two hard 90s one after the other in route.
MVP-LMP-SU-26	164.6	165.15	1320	33 - 43	No*	Steep side slopes outside of construction right-of-way. Two gullies at saddles are outside of the construction right-of-way.
MVP-LMP-MO-27	182.4	182.8	808	18 - 28	Yes*	Some slope movement is indicated on historical imagery within the past 20 years.
MVP-LMP-GI-28	197.4	197.6	1800	18 - 26	No*	Jefferson National Forest:
MVP-LMP-GI-29	198.4	199.1	2300	18 - 35	No*	Jefferson National Forest:
MVP-LMP-GI-30	204.4	204.8	1120	39	No	Lateral slope side cut, paralleling transmission power line.
MVP-LMP-GI-31	211.5	211.8	1184	32 – 53	No	Very steep slope, centerline may or may not be on ridge. Directly above U.S. 460.
MVP-LMP-MN-32	219.6	220.9	1200	25 - 40	No*	Jefferson National Forest:

	Table 1 - Landslide Concern Areas Crossed by the MVP Pipeline					
Designation	**Beginning MP**	**Ending MP**	**Length Crossed (feet)**	**Slope (%) [a]**	**Signs of Recent Movement [b]**	**Notes [c]**
MVP-LMP-MN-33	220.6†	220.7†	310	59	No	Very steep slope where route makes a 90 degree turn off the ridge. Very short section, but because of the severity of slope, could be prone to slippage. Cuts across one stream. Not included in October 2016 Proposed Route.
MVP-LMP-MN-34	221.8†	221.9†	380	46	No*	Steep slope runs alongside of knoll, directly above substation. Not included in October 2016 Proposed Route.
MVP-LMP-MN-35	229.2	229.3	640	28	No*	Slight sidehill. Crosses stream.
MVP-LMP-FR-36	261.2	261.2	179	40	No*	Steep side slope, but just for small section. Running just below ridge line through a gulley. Crosses one natural drain.
MVP-LMP-FR-37	263.9†	264.0†	368	34	No*	Steep side slope. Running just below ridge line through a gulley. Crosses one natural drain. Not included in MVP Route 5.0.
	[a] Design slope is based on desktop and field review, or range from map analysis of alignment. [b] Based on historical imagery. [c] Based on available landslide mapping and field survey. * A field review of this site was performed. † Refers to MVP Route 4.0.0 mileposts.					

4.0 STEEP SLOPES AND RED SHALE

The MVP route will cross numerous bedrock strata, including the Conemaugh, Monongahela, and Dunkard Formations and Mauch Chunk Group. These groups contain landslide-prone shale formations that are sometimes referred to as "red beds" and are frequently associated with landslides that occur in the project area. Detailed descriptions of each formation/group are presented below. Figure 1 illustrates areas where the aforementioned shale formations are present along the pipeline route.

Landslides are documented to be associated with red beds that form in the Conemaugh Formation, Monongahela Formation, Dunkard Group, and Mauch Chunk Formation. Red beds refer to shale or siltstone layers that can appear red, reddish-gray, or greenish-gray due to the presence of iron bearing minerals. These shales are generally slightly fissile, jointed, and slickensided. As these shales are exposed to water and oxygen near the surface they weather very easily into a thick mud. In addition, impervious layers located beneath the shale may trap water and cause the weathered shale to become saturated. Steep slopes, that are often present in these areas, along with the weathered shale and mud, produce conditions that increase the likelihood for landslides.

Two common types of landslides include rotational slump, and earthflow. Rotational slump is characterized by the movement of a large mass of weak rock or sediment as a block unit along a curved slip plane. These slumps are large, slow moving and produce several distinctive topographic features. The upper section (crown or head) is characterized by transversely oriented rupture scarps that can form terraces of displaced blocks. Depressions and pools of water may form and trees may become inclined upslope. The lower

section (toe) is characterized by a fan-shaped, bulging mass, and radial ridges and cracks. Vegetation on the toe slopes may be seen leaning in strange directions. Earthflow landslides are smaller in size and result in weathered rock or sediment that flows downslope as a jumbled mass, forming a hummocky topography of ridges and swales.

Conemaugh Formation (Upper Pennsylvanian)

The Upper Pennsylvanian-aged Conemaugh Formation consists of cyclic sequences of shale, siltstone, sandstone, red beds, thin impure limestone, thin nonpersistent coal, and underclay, semi-flint clay, and flint clay. The Conemaugh Formation is formally divided into two members, the upper Casselman Formation and the lower Glenshaw Formation, however, several informal members exist as well. The lower member, the Sandy Grove Sandstone Member, is overlain by the Pittsburgh red shale. Sandstone in the Conemaugh Formation is described as medium-light-gray, very fine- to course grained, locally conglomeratic with well-rounded quartz pebbles and subangular limestone and shale fragments, thin bedded to massive. The shales and siltstones in the Formation are generally described as medium and greenish-gray to grayish-red, slightly fissile to poorly bedded, soft, clayey to silty; includes hematite nodules and discontinuous beds of limestone. The red beds and shales of the Conemaugh Formation are associated with landslides. Coal beds are also found in the Conemaugh Formation and are often underlain by underclay, flint clay, or semi-flint clay. These clays are described as medium-gray to grayish-red, poorly bedded with conchoidal fracture and containing fossil root prints. Coal and limestone beds in the Formation are generally thin bedded (around four feet). Limestones consists of medium-gray to light-grayish brown, nodular paleokarst surfaces, mudstone to packstone, and containing fossils.

Monongahela Formation (Upper Pennsylvanian)

The Upper Pennsylvanian-aged Monongahela Formation consists of non-marine cyclic sequences of sandstone, siltstone, red and gray shale, limestone, and coal. The Formation extends from the top of the Waynesburg coal to the base of the Pittsburgh coal and also includes the Uniontown, Sewickley, and Redstone coals. In West Virginia, the thickness of the Formation generally ranges from 170 feet to 300 feet. Sandstone in the Formation is described as medium-light-gray, very fine- to coarse-grained, conglomeratic with rounded quartz pebbles; thin-bedded to massive. Siltstone and shale in the Formation are described as medium- dark-gray to grayish-red, thin to poorly bedded, slightly fissile, silty, carbonaceous, and slightly calcareous. The shales and siltstones of the Formation, commonly known as red beds, are associated with landslides. Coal beds are also found in the Monongahela Formation and are often underlain by underclay, flint clay, or semi-flint clay. These clays are described as medium-gray, grayish-yellow, grayish-red, poorly bedded and brecciated with conchoidal fracture and containing fossil root prints.

Dunkard Group (Upper Pennsylvanian/Permian)

The Upper Pennsylvanian/Permian-aged Dunkard Group consists of non-marine cyclic sequences of sandstone, siltstone, red and gray shale, limestone, and coal. The Dunkard Group contains the Greene, Washington, and Waynesburg Formations. The maximum thickness of the Group, in Wetzel County, West Virginia, is estimated to be about 1,190 feet. Thin coal beds are often underlain with underclay, flint clay, or semi-flint clay that may contain fossil root prints. The coal beds are often overlain with multi-story, thick channel-form sandstone bodies with undulating, erosive bases and roof shale. Sandstones may grade upward back into siltstone, and gray, green, or red shale. Calcarious nodules and slickensides are also present in the shales. Red, green, or gray, mudstone or claystone paleosols may also develop indicating

periods of wetting and drying. These paleosols are typically overlain by nonmarine lacustrine limestone beds. Individual limestone beds are generally less than five feet thick and display evidence of subaerial exposure. Limestone beds are frequently interbedded with argillaceous limestone, calcareous mudstone, and calcareous shale. Red facies of red colored shale, siltstone, and paleosols are prevalent throughout the Dunkard Group and are associated with landslides.

Mauch Chunk Group (Mississippian)

The Mississippian-aged Mauch Chunk Group consists of red, green, and medium-gray shale, siltstone, sandstone, and some conglomerate with a few thin limestones. The Mauch Chunk Group contains the Bluestone and Princeton, Hinton, and Bluefield Formations. In West Virginia, the thickness of the Group ranges from 970 feet to 4150 feet.

The Bluefield Formation of the Mauch Chunk Group consists of Limestone, siltstone, and shale. Limestone is light-grayish-brown, dolomitic, cherty, and fossiliferous. Shale is medium-gray to light-grayish-red, silty, thin and evenly bedded, very calcareous.

The Hinton Formation overlies the Bluefield Formation and consists of red shale and siltstone; sandstone, limestone, and dolomite are also present. The sandstone member at the base of the Formation is light-gray to white, very fine- to coarse-grained, cross-bedded quartzose with few scattered rounded quartz pebbles. The middle member of the Formation, the red member, consists of red silty shale that is locally calcareous and interbedded with thin beds of sandstone, siltstone and impure limestone, and dolomite. The limestone member of the Hinton Formation consists of dark calcareous shale or gray to brownish-gray, fossiliferous, impure shaly limestone. The upper member of the Hinton Formation consists of red, greenish-gray, and gray shale which is locally calcareous and contains several nonpersistent lenticular beds of sandstone and siltstone.

The Princeton Sandstone consists of white quartzose cross-bedded massive sandstone with rounded medium grains and some fine- to coarse-grained and conglomeratic zones. The sandstone is cemented with calcium carbonate or silica. Some gray to red shale, limestone, and coal are also present.

The Bluestone Formation consists of mostly interbedded shale, mudstone, siltstone, sandstone, limestone, and thin, impure coal seams. The lower member of the Bluestone Formation, the gray shale member, consists of gray and black shale which contains some beds of siltstone, sandstone, red shale, and limestone. The shale is calcareous and locally carbonaceous. The upper half of the member is mostly conglomeratic sandstone. The middle member, the red member, is composed of calcareous red shale with some siltstone, small amounts of calcareous sandstone and lenticular beds of limestone. The upper member of the Bluestone Formation consists of white, gray and greenish-gray sandstone. The sandstone is medium- to coarse-grained and locally conglomeratic and contains cross-bedding. The sandstone is interbedded with gray, green, black, and red shale and siltstone.

The Mauch Chunk consists of red and green shales, similar to the red beds found in the Conemaugh and Monongahela Formations. The shales are moderately high in clay minerals, are highly susceptible to weathering, and are prone to mass wasting. The residual soils have a moderate shrink-swell potential and are susceptible to gully erosion.

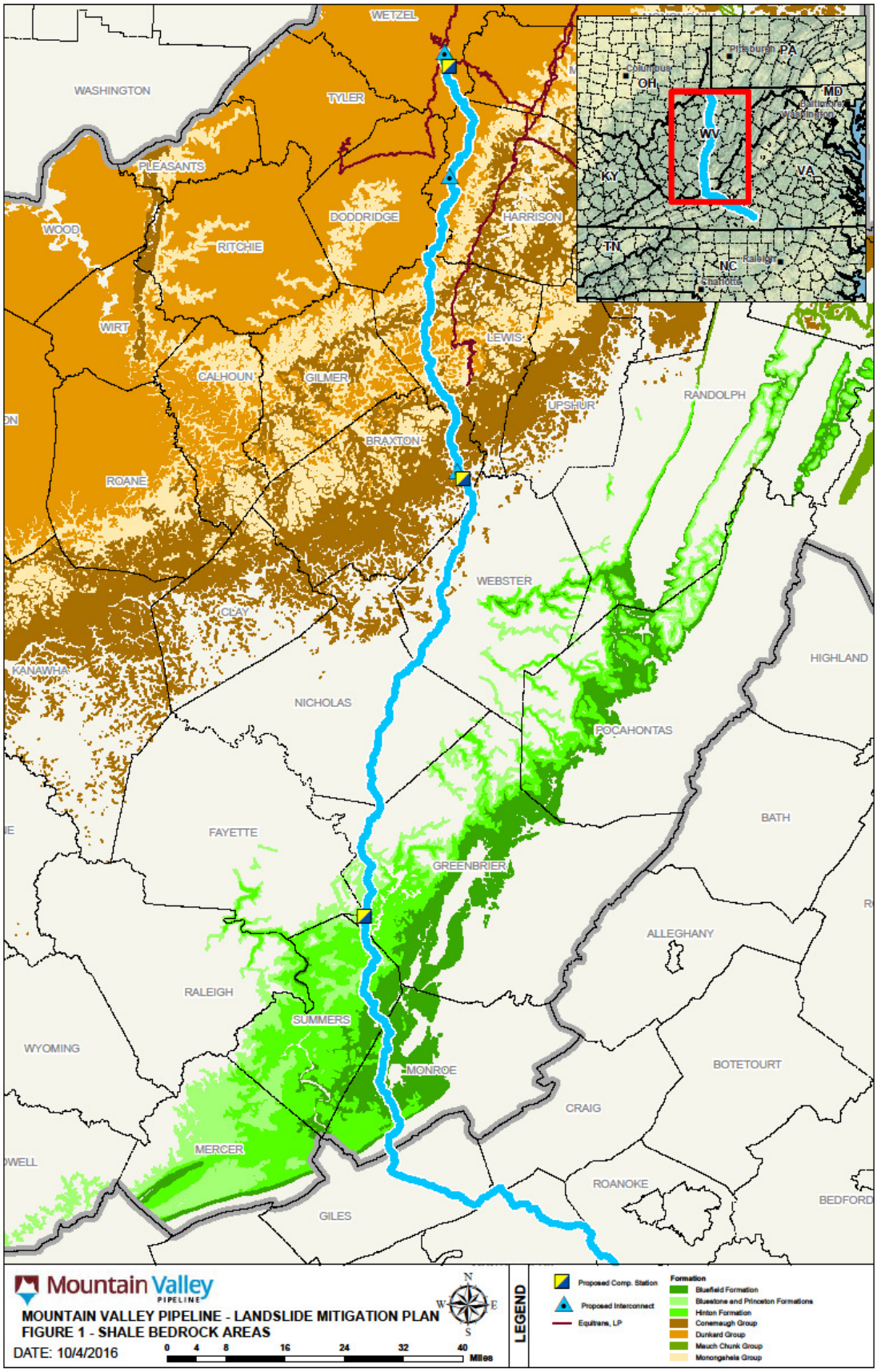
WETZEL
WASHINGTON
TYLER
PLEASANTS
WOOD
RITCHIE
DODDRIDGE
HARRISON
WIRT
CALHOUN
GILMER
LEWIS
UPSHUR
RANDOLPH
BRAXTON
ROANE
WEBSTER
CLAY
KANAWHA
NICHOLAS
POCAHONTAS
HIGHLAND
FAYETTE
GREENBRIER
BATH
ALLEGHANY
RALEIGH
SUMMERS
WYOMING
MONROE
BOTETOURT
CRAIG
MERCER
ROANOKE
GILES
BEDFORD
Columbus
OH
Pittsburgh
PA
MD
WV
KY
VA
TN
NC
Raleigh
Charlotte
Mountain Valley PIPELINE
MOUNTAIN VALLEY PIPELINE - LANDSLIDE MITIGATION PLAN
FIGURE 1 - SHALE BEDROCK AREAS
DATE: 10/4/2016
0 4 8 16 24 32 40 Miles
N
W
E
S
LEGEND
Proposed Comp. Station
Proposed Interconnect
Equitrans, LP
Formation
Bluefield Formation
Bluestone and Princeton Formations
Hinton Formation
Conemaugh Group
Dunkard Group
Mauch Chunk Group
Monongahela Group

5.0 POTENTIAL MITIGATION MEASURES

The basic strategies to protect against landslides and slope instability along the pipeline corridor during construction are stabilization, drainage improvement, and erosion and runoff control. Mitigation measures that may be used on MVP are outlined below and prescribed to specific project areas in Section 8.0. Construction typical drawings for selected mitigation measures are shown in the Appendix.

- Excavation and/or Regrading of Upgradient Head Soils: Regrading to a flatter slope upgradient of the pipeline excavation will increase the slope stability factor of safety by reducing the weight of soil at the top of the slope.
- Bedrock Embedment: Installing the pipeline completely within a bedrock trench will protect the pipeline integrity in the event of a surficial landslide.
- Dewatering: Dewatering a slope is often the most cost effective means to stabilize a slope and prevent future landslides. Saturated soil has an increased unit weight and higher pore water pressure, both of which negatively affect the slope stability factor of safety. To prevent soil from becoming saturated, runoff will be directed away from the potentially unstable slope and drains will daylight subsurface water.
- Erosion and Runoff Control: Typical erosion and sediment control BMPs will be implemented during pipeline construction and will be detailed in the Project plans. Installing additional erosion and sediment control measures will increase slope stability by minimizing soil saturation, as in dewatering. BMPs that are recommended for slope stabilization are summarized below.
    - Berms: Diversion berms will be used to intercept, divert, and convey surface runoff from steep slopes to decrease the chance of rill or gully erosion to occur which could weaken the stability of steep slopes. The outlet of all diversion berms will be armored with riprap to act as an energy dissipater and prevent localized erosion.
    - Rock Outlet Protection (Riprap): Rock outlet protection (riprap) will be used at the outlets of trench drains, sidehill low-point drains, berms, culverts, etc., to control the velocity and potential for erosion of the storm water runoff.
    - Sidehill Low-Point Drain: Sidehill low-point drains will be installed from the main pipeline trench at the upgradient side of a trench breaker to drain water out of the trench and outlet it to an area with rock outlet protection.
    - Trench Drain: Trench drains will be installed on side slopes and steep slopes in order to dewater the uphill slope.
    - Water Bar (Broad-Based Dip): Water bars will be used across the right-of-way, sloped to drain water off of the pipeline right-of-way.
    - Trench breakers (Trench Plugs): Trench breakers constructed of sandbags will be used in trenches along pipes to control water flowing through the pipeline trench. Excessive amounts of water will saturate the slope and destabilize it.
    - Hard Armor: Hard armoring existing drainage channels with riprap or articulated concrete block (ACB) will minimize slope saturation and erosion by stormwater. Areas susceptible

to future erosion, especially above the pipeline, may be armored with articulated concrete block (ACB) or riprap, as necessary.

- Rerouting: Minor route adjustments may be made to avoid landslide-prone areas identified during construction.

Construction operations will be staffed with geotechnical personnel who will prescribe additional mitigation measures as needed when subsurface conditions are revealed. The following measures are not currently anticipated but may be implemented during construction, as needed.

- Buttressing: An earth, rock, or riprap fill buttress in front of an unstable slope will increase the weight of the material at the toe of the slope, thereby increasing the slope stability factor of safety.
- Reinforced Soil Slope: Incorporating multiple layers of geogrid or other geosynthetics between compacted lifts of soil or crushed stone will increase the shear strength of the fill, decreasing the risk of a slope movement.
- Rockfall Protection (Fencing): Protection measures such as rock fences, placement of concrete barriers, or creating catchment areas may be added where excavation is planned at the top of steep slopes to limit loose debris and protect downslope property or roadways.
- Soil-Nail Stabilization: Soil-Nail Stabilization is used to stabilize unstable soil slopes or allow for safe over-steepening (if required) of new or existing soil slopes. Tension-resisting steel elements will be inserted into holes in the soil surface and grouted or directly driven into the ground surface to anchor a steel cable or net system at the surface of the ground.

6.0 MAINTENANCE AND MONITORING

Maintenance and monitoring measures will be implemented to confirm the pipeline integrity in areas susceptible to landslides.

In all of the areas where there was evidence of a previous landslide in close proximity to the pipeline, or there remains some uncertainty, slope monitoring will be conducted. In some cases, this may be limited to periodic visual evaluation, but in others, more robust monitoring may be appropriate. The need for future monitoring will be field determined by an engineering geologist or geotechnical engineer during construction. If monitoring is necessary, specific requirements will be established for each location following construction.

7.0 SIDEHILL CONSTRUCTION

In sidehill construction areas (as defined on the project alignment sheets), the following construction practices shall be observed (in addition to landslide mitigations prescribed for locations specified in this document):

- Seeps or springs encountered in the excavation shall be intercepted by transverse trench drains, cutoff drains, or similar, and directed out of the pipeline ditch to an energy dissipating structure (such as a riprap apron).
- Backfill material shall exclude organic material, vegetation, stumps, root systems, frozen material, and rocks larger than three inches in diameter.

- Backfill operations shall be performed when soil moisture content is suitable for compaction, at or near optimum moisture content (i.e., not immediately following a large precipitation event or when soil is excessively dry).
- Backfill material shall be placed in compacted lifts no greater than 12 inches thick.
- Backfill compaction shall be accomplished using the back of an excavator bucket, sheep's foot roller, or similar.
- Where a temporary cut and fill surface is required, any ground fractures forming near the cut/fill line or the pipeline ditch shall be repaired to prevent water infiltration.
- All streams, gullies, natural drains, field roads or trails, and other water conveying features shall be properly recontoured such that the permanent right-of-way is protected from preferential water accumulation and infiltration.

8.0 SITE SPECIFIC MITIGATION

Recommendations for landslide mitigation at each of the 37 areas identified in Table 1 are described below. Landslide mitigation typical detail drawings are appended.

Generally, landslide mitigation will depend heavily on the installation of appropriate drainage and erosion control measures during pipeline construction (as described in Resource Report 6.6.1.2) and proper right-of-way reclamation. Backfilling operations in the areas discussed below and all sidehill construction areas identified on the alignment sheets (as discussed in Section 7.0) will be accomplished by following specific guidelines. Fill material will exclude organic material, vegetation, stumps, root systems, and rocks larger than three inches in diameter. When placed in the trench, this select material will be placed in compacted lifts of no greater than 12 inches thick. Compaction may be accomplished using the back of an excavator bucket, a sheep's foot roller, or similar. Where a cut and fill surface is required, contractors will ensure that any ground fractures that form at the interface of that surface and the pipeline ditch are repaired. Finally, inspectors or on-site engineers/geologists will ensure that all identified streams, gullies, natural drains, field roads or trails, and any other water conveying features are properly recontoured such that the permanent right-of-way is protected from preferential water accumulation and infiltration.

Additional mitigation measures beyond these may be required depending on site specific conditions. These are described below based on the results of the field investigations.

- **MVP-LMP-WE-01 (MP 3.3 to 3.8):**

  The pipeline in this area runs along the crest of a ridge between MP 3.3 to 3.5, drops down along a steep side slope between MP 3.5 and 3.8, and continues along the ridgeline beyond MP 3.8. The primary area of concern falls between MP 3.55 and 3.77. The side slope in this area varies from 41.5 % to 51.2% below and above the pipeline, respectively.

  Although the field survey found no evidence of recent slides in this area, the state landslide topographic maps indicate dormant slides are located in this vicinity. The field survey did observe three primary gullies draining to the east down this bowl-shaped slope.

  As this area may be prone to landslides, the right-of-way will be kept drained by installing transverse trench drains along the right-of-way. The trench drain will convey water out of the

pipeline trench. The gullies noted during the site visit will be restored to original contours to facilitate surface water drainage. The ultimate protective measure for the pipeline in this area will be embedment of the pipe within the local bedrock.

- **MVP-LMP-HA-02 (MP 28.0 to 28.2):**

The pipeline in this area runs entirely along the crest of a ridge with steep side slopes ranging from 31.2% to 54%. This location is near well appurtenances at MP 28.25 located approximately 40 feet east of the pipeline.

A 10-foot wide slump was noted in the field survey approximately 75 feet west of the pipe centerline at MP 27.95 on the side slope. A large rock outcrop was also noted on the east side near the pipe centerline at MP 28.0. Multiple gullies were observed outside of the right-of-way from MP 28.1 to 28.2.

As the pipeline follows the ridge and the existing slump will not be affected by construction operations, no additional mitigation is required at this location. Where practical, the pipe trench will be located in bedrock to protect the pipe in the event that the subjacent slope fails.

- **MVP-LMP-DO-03 (MP 32.4 to 32.6):**

The pipeline in this area runs downslope from a crest at a slope of 30% to 35% before crossing a stream and cutting across the toe of a side slope between MP 32.3 and MP 32.55. Although historical imagery shows no signs of recent movement, the hillside was previously cleared and landslide topographic maps show this portion of the route crossing through dormant slides and/or soil prone to movement. The soils in this region were classified as a Gilpin-Peabody Complex or Vandalia Silty Loam (NRCS Hydrologic Soil Group C).

The lower section of the slope was recently cleared and is mainly vegetated with grasses and/or small shrubs. The upper portion is vegetated with trees and overgrown with shrubs. Along the toe of the slope, the existing three-foot-wide stream is actively eroding the toe as indicated by the steep cut bank and slumping of material into the stream. A scarp was indicated in the field report at MP 32.4 that was approximately 12-feet tall and 50-feet long with evidence of gravitropism.

The area with visible scarp and steep side slopes following it may be prone to landslides. In this area, a trench drain will be installed on the high side of the right-of-way, daylighting to the low side. It should also be buttressed with a riprap fill at the edge of the right-of-way, if needed during construction. At the steep downslope before the stream crossing, water bars in conjunction with trench breakers and trench breaker daylight drains will be installed.

- **MVP-LMP-HA-04 (MP 33.45 to 33.6):**

The pipeline in this area runs entirely along the crest of a ridge with steep side slopes ranging from 34% to 48%. The primary area of concern falls between MP 33.45 to MP 33.6. As the pipeline excavation runs along the crest it crosses an existing right-of-way with an underground pipe near MP 33.55.

During the field observation no evidence of mass movement was observed on the vegetated slopes or existing cleared right-of-way. Soils in this section were classified as Gilpin-Peabody Complex or Gilpin-Upshur Complex (NRCS Hydrologic Soil Group C).

No additional mitigation measures are necessary in this area.

- **MVP-LMP-DO-05 (MP 34.2 to 34.4):**

The pipeline in this area runs along a side slope and crosses a number of gullies between MP 34.25 and MP 34.35 with side slopes ranging from 25% to 48%. The primary area of concern lies between MP 34.25 and MP 34.35. Historical imagery shows no recent signs of landslide movement in the area, and the soils were classified as Gilpin-Peabody Complex (Very Stony, NRC Hydrologic Soil Group C).

Rock armoring (or ACB) will be used between MP 34.25 to MP 34.32 after backfill of the pipeline excavation to help stabilize the gully crossings, which will be restored to their original contours. A trench breaker, in conjunction with a sidehill low-point drain which will outlet to a rock outfall protection location, will be used at the low point near MP 34.35. Where practical, the pipe trench will be located in bedrock to protect the pipe from shallow soil movements.

- **MVP-LMP-DO-06 (MP 34.4 to 34.6):**

The pipeline in this area runs along steep side slopes and crosses a number of gullies as well as an area that is a cut slope adjacent to an existing road with visible slumps and associated scarps. The slopes in this area range from 17% to 42%.

The most critical area is a 150-foot-long, 300-foot-wide section next to an existing cut slope with multiple large slumps and scarps. The field reports also noted a long coal seam with standing water and saturated slopes below the seam. The soils in this region were noted as Gilpin-Peabody Complex, very stony (NRCS Hydrologic Soil Group C).

The area exhibiting slumps and scarps must be stabilized by removing and replacing the slumping soils prior to placing additional material in that area. Transverse trench drains will be installed uphill of the pipeline to cut off water ponding near the coal seam outcrop. Gullies will be restored to their natural contours to facilitate drainage across the right-of-way. Where practical, the pipe trench will be located in bedrock to protect the pipe in the event that the subjacent slope fails.

- **MVP-LMP-DO-07 (MP 35.15 to 35.35):**

The pipeline in this area runs along the crest of a ridge between MP 35.15 to MP 35.35 with steep side slopes ranging from 27% to 69%. Historical imagery shows no signs of recent landslide movement and the soils in the area were classified as Gilpin-Peabody Complex, very stony (NRCS Hydrologic Soil Group C).

A trench breaker should be used in the trench in conjunction with a sidehill low-point drain that outlets to a rock outfall protection location at the low point near MP 35.25. Where practical, the pipe trench will be located in bedrock to protect the pipe in the event that the subjacent slope fails.

- **MVP-LMP-LE-08 (MP 43.35 to 43.45):**

The pipeline in this area will be constructed along the ridgeline between MP 43.15 to 43.2, then at the local peak turns slightly eastward and runs approximately 100 to 200 feet from the top of the adjacent ridgeline to the west between MP 43.2 to 43.45. The remainder of the pipeline in this area follows the existing saddles and ridgeline to the southwest between MP 43.45 through 43.65. The primary area of concern falls between MP 43.25 and 43.45.

The side slopes in this area vary from approximately 58% above the pipeline and 53% below the pipeline. The pipeline right-of-way in this area is crossed by an existing gas pipeline at approximately MP 43.35. During the field survey, multiple rock outcrops were observed along the top of the slope/ridgeline that were undercut at the base up to five feet. In addition, large boulders located downslope of these outcrops indicate that future rockfall in the area is possible. Some evidence of gravitropism was noted at the top of slope above the pipeline centerline, which indicates that soil movement has occurred in the past. Although the field survey found little to no evidence of recent slides in this area, the state landslide topographic maps indicate dormant slides are located in this vicinity. The NRCS soil classification for this area is Hydrologic Soil Group C soil that represents a sandy clay loam.

Transverse trench drains will be installed in the pipeline trench. Water bars in conjunction with trench breakers with drains will be installed in the steeper downhill sections of the pipeline. Where practical, the pipe trench will be located in bedrock to protect the pipe in the event that the subjacent slope fails.

- **MVP-LMP-LE-09 (MP 46.2 to 46.5):**

In this area, the pipeline right of way is aligned to the eastern side of a knoll from about MP 46.25 to 46.4 where it follows a saddle to about MP 46.5. Side slopes in the area range from approximately 15% to 33%. Soils in the area are classified as Gilpin-Upshur silt loams, corresponding to NRCS Hydrologic Soil Group C.

The site visit revealed numerous rock outcrops about the knoll between MP 46.25 and 46.4. Several swales and evidence of gravitropism were observed between MP 46.4 and 46.5. The area is forested.

Transverse trench drains will be installed in sidehill portions of the alignment and the ground surface will be restored to existing contours. Where practical, the pipeline trench will be located in bedrock to protect the pipe from shallow soil movements.

- **MVP-LMP-LE-10 (MP 46.6 to 46.8):**

The pipeline in this area has been rerouted since the initial field visit to be constructed generally along the ridgeline in this area. The primary area of concern falls between MP 46.5 and 46.8 on the western slope. The western side slopes in this area have an approximate 18 to 25% grade and the eastern side slope (located over the uphill ridgeline) have varying range of slopes (20 to 40%) with an average slope of approximately 25%.

During the field survey, one scarp and one gully were located on the eastern slope area and two gullies and two scarps were observed on the western side slope. The gullies have been delineated as streams. Some evidence of gravitropism was noted along the top of the western slope above the pipeline centerline, which indicates that soil movement has occurred in the past. Although the field survey found little to no evidence of recent slides in this area, the state landslide topographic maps indicate dormant slides are located in this vicinity and historical scarps were present. The NRCS soil classification for this area is Hydrologic Soil Group C soil that represents a sandy clay loam.

Transverse trench drains will be installed in the pipeline trench through the sidehill portion of the alignment. Water bars in conjunction with trench breakers will be installed in the steeper downhill

sections of the right-of-way. Gullies will be restored to original contours to facilitate drainage across the right-of-way. Where practical, the pipe trench will be located in bedrock to protect the pipe from shallow soil movements.

- **MVP-LMP-LE-11 (MP 53.0 to 53.3):**

A majority of the pipeline in this area is to be constructed along the existing ridgeline on the western side slope between MP 52.9 to 53.35. An existing cemetery is located at the top of the slope approximately 100 feet east of MP 53.1 and creates a gently sloping ridgeline. A gated roadway located just south of the cemetery also parallels the proposed gas pipeline to the east along the ridgeline at a distance/offset of approximately 50 feet between MP 53.05 through 53.2. An abandoned road right-of-way located on the western slope crosses the gas pipeline at MP 53.1.

During the field survey, multiple road failures were identified along this abandoned right-of-way. An existing gas line that runs northwest to southeast intersects the new pipeline at MP 53.2. The primary area of concern falls between MP 53.0 and 53.15; the western side slopes in this area have an approximate 25% to 30% grade.

Seven gullies, some of which were delineated as streams, were identified on the western slope. Although the field survey found no evidence of recent slides in this area, the state landslide topographic maps indicate dormant slides are located in this vicinity. The NRCS soil classification for this area is Hydrologic Soil Group C soil that represents a sandy clay loam.

In areas where the pipeline crosses gullies and natural drains, the grade will be restored to original contours to facilitate drainage. Water bars in conjunction with trench breakers will be installed in the steeper downhill sections of the right-of-way. Transverse trench drains will be installed in sidehill sections of the right-of-way to prevent saturation of the trench backfill. Where practical, the pipe trench will be located in bedrock to protect the pipe from shallow soil movements.

- **MVP-LMP-LE-012 (MP 55.1 to 55.2):**

The pipeline in this area will be constructed perpendicular to a valley. The northwestern slope section of the pipeline starts at MP 54.9 (top of slope) and runs down slope to MP 55.1 at Copley Road located at the toe of slope. The pipeline will then cross under an existing drainage ditch, Copley Road, and stream. The pipeline then ascends the adjacent slope from MP 55.1 (Copley Road at toe of slope) to MP 55.25 (top of slope). The primary areas of concern are the two aforementioned side slopes that fall between MP 54.95 and 55.25.

The northwestern side slope in this area is well vegetated with trees and shrubs and has an approximate grade that ranges from 35% to 45%. A 20-foot high rock outcrop is located at the toe of slope on the northwestern side of Copley Road. A "Falling Rocks" warning sign is also located along this section road. Many of the trees located throughout this slope show signs of gravitropism that indicates soil movement on the slope has occurred in the past. The southeastern side slope is also well vegetated with trees and shrubs and has an approximate grade that ranges from 43% to 53%. The NRCS soil classification for this area is Hydrologic Soil Group C soil that represents a sandy clay loam.

Water bars in conjunction with trench breakers will be installed along the pipeline in this area. Trench breaker daylight drains will be installed at the base of some trench breakers to allow for

discharge of infiltrated water from the trench to areas outside or downstream of the area of concern. At this time, stabilization measures for the very steep slope superjacent to Copley Road have not been finalized as the work will require approval from the owner of the road, but MVP anticipates that a highwall revetment may be required.

- **MVP-LMP-LE-13 (MP 57.2 to 57.7):**

The pipeline in this area runs along the crest of a ridge, then at a local peak runs along steep side slopes on the west side of the ridgeline between MP 57.3 and 57.6. The slope below this area of concern also has two gullies with one associated seep located down gradient to the northwest, off of the right-of-way. The gullies lead to a creek at the toe of the slope that is approximately 10 feet wide. The creek did not form significant cut slopes or show signs of significant toe erosion. Across the side slopes, signs of gravitropism were observed. Tree deformation was more significant at the steep section and was present down to the toe of the slope. The corridor in this area also crosses two abandoned roads. The forest floor has little to no vegetative cover, occupied by small shrubs and ferns with silty clayey sand and sandstone cobbles and boulders scattered across the slope. Historical imagery shows no recent signs of movement.

Transverse trench drains will be installed in the pipeline trench through the sidehill area of the alignment. Where practical, the pipe trench will be located in bedrock to protect the pipe from shallow soil movements.

- **MVP-LMP-BR-14 (MP 66.8 to 66.95):**

The pipeline in this area is to be constructed subjacent to the Weston and Gauley Bridge Turnpike Trail, sidehill along a moderate side slope. The trail follows the ridgeline with moderate side slopes in the vicinity. The pipeline crosses the trail at approximately MP 66.95. Soils in this area are classified as Gilpin-Upshur silt loam (NRCS hydrologic soil group C).

The area is generally wooded but is a vegetated open field in the vicinity of MP 66.9 to 66.95. No evidence of recent or historic slope movement was observed at this location.

Transverse trench drains will be installed in the sidehill portion of this area.

- **MVP-LMP-BR-15 (MP 69.2 to 69.5):**

The pipeline in this area is to be constructed along the ridgeline between MP 69.0 to 69.2, then runs approximately 500 feet downslope from the adjacent ridgeline to the west between MP 69.2 to 69.45. The remainder of the pipeline in this area follows the existing saddles and ridgeline to the southwest of MP 69.45. The primary area of concern falls between MP 69.2 and 69.45.

As the property could not be accessed due to landowner restrictions, no field survey or report was prepared for this sidehill area, and the preliminary evaluation was prepared based on summary descriptions provided by routing engineers and publically available imagery and information for the area. The side slopes upgradient (west) of the pipeline right-of-way range from approximately 41% to 67% and downgradient (east) from 28% to 36%. The area is well vegetated with trees. Historical imagery does not suggest recent landslide/soil movement in the area, nor does it cross an existing or dormant slide. The NRCS soil classification for this area is Hydrologic Soil Group C soil that represents a sandy clay loam.

Transverse trench drains will be installed on the upgradient edge of the right-of-way, conveying the water out of the area of concern. Water bars in conjunction with trench breakers will be installed at the steep downhill sections of the right-of-way. Sidehill low point drains will be installed at selected trench breakers.

- **MVP-LMP-WB-16 (MP 81.8 to 82.1):**

The pipeline in this area will be constructed along the upgradient edge of an existing, ephemeral drainage between MP 81.8 and 82.0 with moderately steep side slopes. Dave Cowger Hill Road is located upgradient of this pipeline segment. The upgradient slopes between the road and the pipeline range from 40% to 45% and 150 to 250 feet in length. The pipeline then runs up the moderately steep slope to the south (approximately 52% grade) to the top of a saddle at MP 82.05. From the top of the saddle, the pipeline runs at an angle across a relatively steep slope (slope grade ranges from 28% to 63% with angled pipeline grade ranging from 18% to 35% in the trench) to the toe of slope in a valley at MP 82.3.

All of the slopes appear to be heavily vegetated with trees and the forest floor is comprised of scattered shrubs and sparse vegetation. During the field survey, five significant gullies were identified between MP 81.9 and MP 82.0. These gullies range in width from three feet to 20 feet; four of them are delineated as streams. Although the field survey found no evidence of recent slides in this area, the state landslide topographic maps indicate dormant slides are located in this vicinity. The NRCS soil classification at MP 81.8 is Hydrologic Soil Group B soil that represents a silt loam or loam and MP 81.9 to 82.1 is Hydrologic Soil Group C soil that represents a sandy clay loam.

Water bars in conjunction with trench breakers will be installed at the steep downhill sections of the pipeline in this area. Transverse trench drains will be installed in the pipeline trench. Gullies will be restored to their natural contours to facilitate drainage across the right-of-way; the gully not delineated as a stream will be armored with rock or ACB to minimize erosion. Where practical, the pipe trench will be located in bedrock to protect the pipe from shallow soil movements.

- **MVP-LMP-WB-17 (MP 82.5 to 82.6):**

The pipeline runs up a moderate side slope to the south, across a natural drain, and up a steep ridge. The side slopes vary from 37% to 70%. However, the pipeline alignment avoids the steepest sections. At MP 82.6 the pipeline crosses a significant natural drain. From MP 82.6 to 82.9 the pipeline runs directly up a steep slope (44% to 55%).

Both the historical imagery and the field survey indicated no signs of recent slope movement or gravitropism. The soil type in this area has been identified as sandy clay loam, but colluvial material may be present near the drain paths which could be unstable.

In areas where the pipeline crosses gullies and natural drains, the grade will be restored to original contours to facilitate drainage. Transverse trench drains will be installed in the sidehill portion of the alignment in this area. Water bars in conjunction with trench breakers and drains will be installed in the steeper downhill sections of the right-of-way.

- **MVP-LMP-NI-18 (MP 111.7 to 111.8 -MVP Route 4.0.0):**

The area of concern runs between MP 111.7 and 111.85 (MVP Route 4.0.0) where the pipeline corridor goes down a ridge with side slopes between 35% and 47%. At MP 111.85, the pipeline

corridor makes a 90-degree bend and continues normal to the slope, reaching a significant drainage crossing at MP 111.92.

Historical imagery shows no signs of recent landslide movement However, the landslide topographic maps show the pipeline running through dormant slides and/or material prone to landslide movement. No field survey or report was completed in this area as the property could not be accessed due to landowner restrictions. The soil in this area was classified as Clifftop Channery Silt Loam, very stony (NRCS Hydrologic Soil Group C).

The pipeline in this area has been re-routed and this area is no longer of concern.

- **MVP-LMP-NI-19 (MP 122.5 to 123.0):**

The pipeline in this section traverses side slopes ranging from 28% to 43% and crosses four drainages and under a transmission line and road.

Although historical imagery reveals no signs of recent landslide movement, this section cuts through an area with dormant slides and/or material prone to sliding. Soils in the region were classified as a variety of different soil groups (NRCS Hydrologic Soil Groups A, C and D). The field survey revealed numerous natural drains and several large boulders along and adjacent to the route. Some areas showed evidence of gravitropism and hummocky terrain.

Transverse trench drains will be installed in the pipeline trench throughout the sidehill area. Numerous boulders and rock outcrops suggest that bedrock will be relatively shallow in the area and that the pipeline trench will be located in bedrock, minimizing the potential for damage due to earth movement.

- **MVP-LMP-NI-20 (MP 123.1 to 123.2):**

The pipeline in this area crosses an existing gully and seep at MP 123.1, crosses a sidehill parallel to a cleared existing power line right-of-way at a slope of 12.5% between MP 121.13 to 123.2, and then runs normal and downhill on a well-vegetated steep slope with slopes ranging from 30% to 60% between MP 123.13 to 123.2.

The field survey noted one seep near MP 123.2 that was actively flowing to a gully that crosses the corridor just to the north. The gully becomes up to 10 feet wide and three feet deep near the corridor centerline and has been delineated as a stream. Although the historical imagery shows no signs of recent movement, the landslide topographic map shows this portion of route crosses through soil prone to movement. The field survey defined the soil as decomposed plant material, silt loam, and silty clay loam.

In areas where the pipeline crosses gullies and natural drains, the grade will be restored to original contours to facilitate drainage. Water bars in conjunction with trench breakers will be installed in the steeper downhill sections of the right-of-way. Transverse trench drains will be installed in the sidehill portions of the alignment.

- **MVP-LMP-NI-21 (MP 124.35 to 124.75):**

The pipeline in this area runs along the crest of a moderately sloping ridge then continues to run south downslope off the ridge though a valley with steep slopes. The valley located between MP 124.5 and 124.6 has a seasonal stream located at the toe of the slope. The steep slopes around the

valley are mostly vegetated by trees. The forest floor has little to no vegetative cover and was covered in fallen leaves at the time of the site visit. No signs of erosion were observed from the seasonal stream at the toe of the slope but erosion around the base of trees was observed.

Historical imagery shows possible signs of recent movement and the landslide topographic map shows this portion of the route crosses through soil prone to movement.

Trench breakers and drains will be installed in the steeper downhill sections of the right-of-way.

- **MVP-LMP-NI-22 (MP 127.2 to 127.4)**:

The pipeline in this area runs northwesterly upslope along a crest of a ridge then turns southerly downslope between MP 127.2 to MP 127.0. The primary area of concern runs from MP 127.2 to MP 127.5. The steep slopes off the side of the crest where the pipeline runs along the slope vary from 30% to 40%.

Historical imagery and the site visit revealed no signs of recent landslide movement. However, landslide topographic maps show materials that are prone to landslide movement. Rock outcrops were observed along the pipeline right of way during the site visit. An existing logging road with steep high-side cut, approximately three feet high, is located at the southern end of the segment.

Transverse trench drains will be installed at low points along the pipeline alignment to facilitate drainage of the pipeline trench and prevent slope saturation.

- **MVP-LMP-NI-23 (MP 127.9 to 128.0):**

The pipeline in this area runs along the crest of a ridge between MP 127.8 to 127.92, then drops down along a steep side slope between MP 127.92 to MP 128.0. The primary area of concern falls between MP 127.92 and MP 128.0. The side slope in this area varies from 30% to 40% along the pipeline.

The site visit revealed that the sidehill area of the pipeline route contained numerous rock outcrops. Historical imagery shows no sign of recent landslide movement. However, landslide topographic maps show slide prone material. NRCS data show the soils in this area to be a sandy loam and silt loam.

If possible, the pipeline alignment should be rerouted to traverse directly uphill to the peak of the knoll and back downhill, eliminating the sidehill portion. If this is not possible, transverse trench drains will be installed in the sidehill portion of this area. Water bars in conjunction with trench breakers and drains will be installed in the steeper downhill sections of the right-of-way.

- **MVP-LMP-NI-24 (MP 132.0 to 132.1):**

The pipeline in this area runs along a side slope and crosses a gully with two contributing seeps west of the pipeline between MP 132.0 to MP 132.1 and then continues southeasterly down a moderately steep slope.

Although the field survey and historical imagery show no signs of recent landslide movement, the landslide topographic maps show soil prone to movement uphill (west) of the pipeline excavation and a dormant slide downhill (east) of the pipeline excavation. The soil type in this area has been defined as a Clifftop Channery silt loam, very stony, Hydrologic Soil Group C.

The primary area of concern lies between MP 131.9 and MP 132.1 with side slopes ranging from 25% to 35% below and above the pipeline. Transverse trench drains will be installed along the pipeline trench and will outlet the water away from the area of concern.

A second area of concern lies between MP 131.8 to MP 132.0, where steep slopes and a drainage way are present. Where the pipeline crosses a gully, the grade will be restored to original contours to facilitate drainage. Water bars in conjunction with trench breakers will be installed in the steeper downhill sections of the right-of-way.

- **MVP-LMP-GB-025 (MP 145.3 to 146.1):**

This pipeline section starts along the broad crest, and crosses a number of drainage ways and small access roads, with some minor turns and two 90-degree bends. The area of concern falls between MP 145.8 and MP 146.1. After a 90-degree bend, the pipeline runs downhill normal to the slope, then crosses a paved road and river.

The steep slopes to the west of the corridor were noted as densely vegetated and overgrown with abandoned logging roads remaining. There will be some gully and road crossing in this area but no mitigation measures are recommended for potential landslides in this area. The soils in the area of concern include sandy loam and silty loam from NRCS soil groups A and C, respectively.

Water bars in conjunction with trench breakers and drains will be installed in the steeper downhill sections of the right-of-way.

- **MVP-LMP-SU-26 (MP 164.6 to 165.15):**

The pipeline in this section begins running perpendicular to a steep upslope (MP 164.6 to MP 164.75), runs across three rounded peaks and follows the crest of the ridge between the peaks. From MP 165.0 to MP 165.15, the route runs normal to a moderately steep downslope with a gully at the bottom.

The field report noted the soils in this area as silty clayey sand with scattered sandstone cobbles. The field report also noted that the pipeline crosses two significant gullies located near MP 164.93 and MP 165.15. The NRCS soil type is this section is silt loam from Soil Group C.

Water bars in conjunction with trench breakers and drains will be installed in the steeper downhill sections of the right-of-way.

- **MVP-LMP-MO-27 (MP 182.4 to 182.8):**

The pipeline in this area runs along the toe of a steep side slope then crosses Slate Run Creek, a local road, and a cleared transmission right-of-way, and State Route 122 between MP 182.4 to 182.8. The area traverses grassed clearings interrupted by dense vegetation of trees and shrubs.

Exposed bedrock (sandstone/siltstone outcrop) was observed in the field down gradient from the pipeline corridor along State Route 122. No signs of movement were observed along the cleared area but signs of gravitropism were noted during the field report on the well-vegetated steep slope up gradient of the corridor. Historical imagery shows movement within the past twenty years, but no slumps were noticeable during the field investigation. The soils in this section are silt loam according to the NRCS classification and of Soil Group D.

Water bars in conjunction with trench breakers and drains will be installed superjacent to State Route 122.

- **MVP-LMP-GI-28 (MP 197.4 to 197.6 - Jefferson National Forest)**:

  The pipeline in this area runs across a moderately sloped knob before following a moderately steep ridgeline downgradient. The adjacent side slopes are steep. The pipeline parallels Mystery Ridge Road in this area.

  The field report noted that slopes were mostly silty sand with sandstone cobbles and boulders scattered throughout, and the soil type in the area was defined as Lily-Bailegap Complex or Nolichucky Very Stony Sandy Loam (NRCS Hydrologic Soil Group B). Some of the side slopes off the ridge were observed to have minor signs of gravitropism. Water bars in conjunction with trench breakers will be installed in the steeper downhill sections of the right-of-way and transverse trench drains will be installed throughout the sidehill portion of the alignment.

- **MVP-LMP-GI-29 (MP 198.4 to 199.1 - Jefferson National Forest)**:

  The pipeline in this area runs along moderate slopes thoroughly vegetated by grasses and used as a cow pasture from MP 198.4 to 198.8. The pipeline then crosses through dense forest and cleared pasture while crossing a smaller two-track road and two streams. The intermittent stream near MP 198.83 has very steep slopes with little to no vegetative cover on the forest floor. The soil is a very loose organic soil with active surficial erosion across the slope. No failures were observed during the field visit. The corridor intersects a perennial stream near MP 198.93 with moderate slopes and dense vegetation. From this stream the corridor traverses a moderately steep sidehill to a broad, relatively flat ridge.

  The soils in the area were noted as Nolichucky Loam (NRC Hydrologic Soil Group B). Overall the slopes are well vegetated with no signs of mass movement except for the steep short slopes leading to the stream near MP 198.93.

  In areas where the pipeline crosses the intermittent streams, the grade will be restored to original contours to facilitate drainage. Water bars in conjunction with trench breakers and drains will be installed in the steeper downhill sections of the right-of-way.

- **MVP-LMP-GI-30 (MP 204.4 to 204.8):**

  The pipeline in this area runs diagonally upslope from MP 204.4 to MP 204.6, then transitions to upslope on a broad ridge to MP 204.7. The slopes along this section vary between 30% and 45%. This section parallels an existing cleared right-of-way for transmission lines. A gully near MP 204.6 is indicated on the topographic mapping.

  No field report was completed for this area as the property cannot be accessed due to landowner restrictions. Historical imagery shows no signs of recent landslide movement. NRCS classifies soil in this region as silt loam (NRCS Hydrologic Soil Group C) or Carbo-Rock outcrop complex (NRCS Hydrologic Soil Group D).

  Where the right-of-way crosses the gully shown on the topographic map, the grade will be restored to original contours to facilitate drainage. Water bars in conjunction with trench breakers and drains will be installed in the steeper downhill sections of the right-of-way.

- **MVP-LMP-GI-31 (MP 211.55 to 211.8):**

  The pipeline in this area runs across an existing access drive and alongside moderate slopes just south of a crest before heading downslope between MP 211.55 and MP 211.8. The primary area of concern falls between MP 211.55 and MP 211.7 where the pipeline right-of-way comes within approximately 15 feet of a nearly vertical slope. US Route 460 is located directly below this steep slope. The remainder of the area of concern crosses apparent drainages with side slopes ranging from 30% to 47%.

  No field survey or report was completed for this area as the property cannot be accessed due to landowner restrictions. Historical imagery shows no signs of landslide movement or slope instability. Soils in this area were classified as Carbo-Rock outcrop complex (NRCS Hydrologic Soil Group D) or Gilpin silty loam (NRCS Hydrologic Soil Group C).

  As any mitigation in the area superjacent to US Route 460 may require approval of the Virginia DOT, slope stabilization measures at this site have not been finalized. At a minimum, water bars in conjunction with trench breakers and drains will be installed in the steeper downhill section of the right-of-way. Where practical, the pipe trench will be located in bedrock to protect the pipe from shallow soil movements.

  Near MP 211.55 (just upstream of access road MVP-GI-249.02), a transverse trench drain and rock lined channel will be installed. Transverse trench drains and trench breakers near MP 211.65 will be installed at an area that appears to be a low point drainage way. At this same location, ACB or riprap will be used to minimize erosion of the right-of-way.

- **MVP-LMP-MN-32 (MP 219.6 to 220.9 - Jefferson National Forest):**

  From MP 219.6 to MP 219.8, the pipeline corridor follows a generally flat profile along the toe of a slope, then swings south and climbs a steep ridge to MP 220.7. The section of pipeline running up the ridge has an average slope of 30% with side slopes ranging from 40% to 80% downslope to drainage ways. From MP 220.65 to 220.95, the pipeline corridor follows relatively flat or gently up sloping terrain with a gravel road crossing at MP 220.7.

  This section was mostly vegetated by trees and shrubs but has occasional sandstone outcrops along the ridgeline. The topsoil was thin and underlying soil was gravelly with gravels composed of fragments of sandstone. Drainage areas from the ridge drain west into Craig Creek. The soil was classified as either Berks and Weikert or Berks and Weikert very stony (NRCS Hydrologic Soil Group B).

  Due to the relatively shallow depth of bedrock in this area (approximately 2.75 feet bgs), it is anticipated that the pipe will be installed/embedded within the bedrock from MP 220 to the end of this area of concern. Water bars in conjunction with trench breakers and drains will be installed in the steeper downhill sections of the right-of-way.

- **MVP-LMP-MN-33 (MP 220.6 to 220.7 – MVP Route 4.0.0)**:

  The pipeline in this area runs down the crest of a broad ridge between MP 220.5 to MP 220.65 (MVP Route 4.0.0), then turns 90-degrees down at a slope of approximately 30% for 150 feet before the pipeline corridor crosses a drainage way near MP 220.66 (MVP Route 4.0.0). The primary area of concern is from MP 220.6 to MP 220.7 (MVP Route 4.0.0). Two additional significant drainage

crossings were encountered at MP 220.8 and MP 220.98 (MVP Route 4.0.0), which have been delineated as streams

No field survey or report was completed for this area due to landowner restrictions, but soils in this region are classified as either Berks-Weikert Complex or Berks and Weikert Soils (NRCS hydrologic Soil Group B).

In areas where the pipeline crosses gullies and natural drains, the grade will be restored to original contours to facilitate drainage. Rock armoring or ACB will be utilized to minimize erosion across the pipeline right-of-way at gullies not delineated as streams. A sidehill low-point drain will be installed in the trench at the drainage crossings.

- **MVP-LMP-MN-34 (MP 221.8 to 221.9 -MVP Route 4.0.0):**

The pipeline in this area runs along relatively flat terrain but, while avoiding a substation to the south, cuts through a knoll for a short 400-foot section between MP 221.8 to MP 221.9 (MVP Route 4.0.0).

The area is located at the edge of a pasture and a wooded area adjacent to an existing powerline right-of-way. It does not appear that construction will impact the slope subjacent to the substation. During the field visit, a sinkhole was observed between the edge of the proposed right-of-way and the substation. Soils in this area were classified as either Frederick and Vertrees gravelly silt loam or Duffield-Ernest Complex (NRCS Hydrologic Soil Group B).

No landslide mitigation measures are required in this area and the sinkhole was delineated in MVP's karst study. This area will no longer affect the pipeline alignment following acceptance of the Mount Tabor Alternative.

- **MVP-LMP-MN-35 (MP 229.2 to 229.3):**

The pipeline in this section runs adjacent to and crosses a power line right-of-way and intermittent stream. After crossing the stream near MP 229.3, the pipeline follows a slight sidehill trajectory above the stream to the power line right-of-way. The forest floor is mostly bare with leaves and some small shrubs, but the area is forested. Soils in the area correspond to NRCS Hydrologic Soil Class A and B and were observed to be very stony.

No landslide mitigation measures are recommended in this area.

- **MVP-LMP-FR-36 (MP 261.2 to 261.2):**

The pipeline in this area crosses State Route 697 and then turns downslope before crossing moderately steep side slopes for approximately 600 feet. The area of concern is in the vicinity of MP 261.2. Houses are located within 200 feet or less of the pipeline corridor but both are uphill from the corridor.

The area is gently sloping with a dense forest of young trees with sparse low-growing vegetation. No evidence of prior slope movement was observed. Soils in the area were classified as Clifford-Hickoryknob Complex (NRCS Hydrologic Soil Group B).

No landslide mitigation measures are required in this area.

- **MVP-LMP-FR-37 (MP 263.9 to 264.0 -MVP Route 4.0.0):**

  The pipeline in this section runs across two existing gravel roads and a cleared right-of-way for transmission lines before turning across a moderate side slope just south of a substation. The primary concern is the steep side slope adjacent to the substation between MP 264.05 to MP 264.1 (MVP Route 4.0.0).

  The right-of-way is brush- and tree-covered in this vicinity. Several boulders were visible at the ground surface, but soil along the right-of-way may have been disturbed during construction of the substation or associated power lines. Just south of the substation, an existing drainage culvert runs downhill to a catch basin on the north side of Energy Boulevard. It appears that this culvert drains to the south side of Energy Boulevard. This drainage should be restored following pipeline construction. The soil type in this section is Clifford fine sandy loam of NRCS soil group B.

  No landslide mitigation measures are required in this area.

  This area will no longer affect the pipeline alignment following acceptance of the Blackwater Alternative.

9.0 ADDITIONAL AREAS OF CONCERN

9.1 Peters Mountain, Sinking Creek Mountain, Brush Mountain, and Giles County Seismic Zone

Potential landslide hazards in the areas of the Giles County Seismic Zone (GCSZ), Peters Mountain, Sinking Creek Mountain and Brush Mountain in southern West Virginia and Southwestern Virginia along the proposed route for the Mountain Valley Pipeline are summarized below. It should be noted that the GCSZ is not a specifically mapped geographic area, but corresponds to a generalized area that is relatively seismically active.

Landslide, debris flow, debris avalanche, earthflow and creep, rockfall (Wieczorek and Snyder, 2009), and rock slump and rock block slides (Schultz and Southworth;1989) are the general categories of mass wasting hazards that may be observed in southern West Virginia and southwestern Virginia. Landslides, flow, avalanche and creep are characteristic of failure in unconsolidated overburden or highly weathered shallow bedrock.

Rock block failure involves gravity-induced movement of massive and intact blocks of bedrock. Schultz and Southworth (1989) identify rock slumps and rock block slides as a specific mass wasting hazard somewhat unique to Peters Mountain, Sinking Creek Mountain and Brush Mountain.

According to Schultz and Southworth (1987, 1989): *Rock block slides tend to occur on the southeast slopes of anticlinal folds composed of sandstone, siltstone and shale. Where these folded beds dip steeply (45 degrees or more) rock slides are relatively small and confined to the uppermost parts of the slope. Where dips are less than 30 degrees, slides show more movement and are areally extensive. Most of the rock block slides are relict features from the Pleistocene Epoch. Dip-slope rock block failure occurs over an extended period of time, and no evidence of recent movement in these areas have been found.*

Trigger events for rock block failure are thought to be primarily associated with pore pressure effects from sustained long-duration or short duration intense precipitation events (Schultz and Southworth, 1987, 1989; Wieczorek and Snyder, 2009). Some researchers postulate that seismic shaking may trigger slope failure,

but no direct evidence is available to support this suggestion. D.G. Honegger Consulting (2015) presents an analysis and recommendations for mitigating seismic-induced risks to MVP.

Rock block failure progresses from an initial stage of downslope sagging and bulging to downslope slumping to brittle fracture along lateral break-away scarps (Schultz and Southworth, 1987). This typified behavior presents an opportunity to establish a monitoring program along the southeast slopes of Peters Mountain, Sinking Creek Mountain and Brush Mountain to provide advanced warning of potential rock block failure, as summarized below.

Mountain Valley Pipeline will monitor for potential rock block slides on the southeast slopes of Peters Mountain, Sinking Creek Mountain and Brush Mountain. As discussed above, rock block slides in these areas of concern are relict features, and if further sliding or slumping is occurring it is a very slow process. The pace of such failures is conducive to establishing a monitoring program and if future observations dictate, establishing an evaluation and mitigation program for the pipeline in areas observed to be at risk. On a five-year basis, MVP will conduct aerial inspection of these slopes with LIDAR, and evaluate the slope characteristics for notable bulging or bowing, and other observations of possible slope movement. If this monitoring program suggests evidence for rock block slumping or incipient failure, Mountain Valley will deploy a field inspection team to the area of concern and establish a mitigation program commensurate with the results of an incipient slope failure study.

It is noted that there is no direct evidence that seismic shaking presents significant risk for acute or catastrophic rock block slides in the relatively seismically active southern West Virginia and southwestern Virginia. This further supports the efficacy of a surveillance program described above.

9.2 Debris Flow Potential along Kimballton Branch

Debris flows are a type of mass movement comprised of soil and rock moving along a shallow sliding surface within soil or weathered, foliated and jointed rock materials. Debris flows are often associated with steep gullies and may be triggered by significant precipitation events.

The pipeline crosses the headwaters of Kimballton Branch (which flows to Big Stoney Creek) between MP 195.7 and 195.8. During construction, an engineering geologist or geotechnical engineer familiar with debris flows will evaluate the area and will be present during pipeline construction to observe the trench and earth materials. Based on the results of these observations, MVP will determine if minor adjustments to the proposed alignment are warranted to mitigate the potential for a debris flow or avoid an existing debris flow. If this area appears to be prone to debris flow recurrence but an alignment adjustment is not practical, mitigation measures, which may include drains and soil reinforcement or other measures depending on subsurface conditions encountered, will be implemented.

10.0 REFERENCES

1. Resource Report 6 – Geologic Resources, Mountain Valley Pipeline Project, Docket No. CP16-10-000, October 2015.

2. Resource Report 1 – General Project Description, Mountain Valley Pipeline Project, Docket No. CP16-10-000, October 2015.

3. Washington State Department of Transportation (WSDOT), Landslide Mitigation Action Plan, Final Report, 2014.

4. Slope Stability and Stabilization Methods, L. Abramson, T.S. Lee, S. Sharma & G. Boyce, 2nd Edition, 2002.

5. Windolph, J.F., Jr. (1987) Geologic map of the Big Chimney quadrangle, Kanawha County, West Virginia. U.S. Geologic Survey: Geologic Quadrangle Map GQ-1612. 1:24,000-scale map.

6. U.S. Geologic Survey, Conemaugh Group. http://mrdata.usgs.gov/geology/state/sgmc-unit.php?unit=WVPAc%3B0 Accessed September 29, 2016

7. Windolph, J.F., Jr. (1987) Geologic map of the Big Chimney quadrangle, Kanawha County, West Virginia. U.S. Geologic Survey: Geologic Quadrangle Map GQ-1612. 1:24,000-scale map.

8. U.S. Geologic Survey, Monongahela Group. https://mrdata.usgs.gov/geology/state/sgmc-unit.php?unit=WVPAm%3B0 Accessed September 29, 2016

9. Fedorko, N., Skema, V. (2011) Stratigraphy of the Dunkard Group in West Virginia and Pennsylvania. Guidebook for the 76th Annual Field Conference of Pennsylvania Geologists: Geology of the Pennsylvanian-Permian in the Dunkard Basin. Pittsburgh, Pennsylvania.

10. U.S. Geologic Survey, Dunkard Group. http://mrdata.usgs.gov/geology/state/sgmc-unit.php?unit=WVPd%3B0 Accessed September 29, 2016

11. Delano, HL. (2011) A Brief Overview of Landslides in Greene and Southern Washington Counties, Pennsylvania and Adjacent Areas. Guidebook for the 76th Annual Field Conference of Pennsylvania Geologists: Geology of the Pennsylvanian-Permian in the Dunkard Basin. Pittsburgh, Pennsylvania.

12. Windolph, J.F., Jr. (1987) Geologic map of the Big Chimney quadrangle, Kanawha County, West Virginia. U.S. Geologic Survey: Geologic Quadrangle Map GQ-1612. 1:24,000-scale map.

13. U.S. Geologic Survey, Mauch Chunk Group. http://mrdata.usgs.gov/geology/state/sgmc-unit.php?unit=WVMmc%3B0 Accessed September 29, 2016

14. U.S. Geologic Survey, Bluestone and Princeton Formations. http://mrdata.usgs.gov/geology/state/sgmc-unit.php?unit=WVMbp%3B0 Accessed September 29, 2016

15. Wilpolt, RH., Marden DW. (1959) Geology and Oil and Gas Possibilities of Upper Mississippian Rocks of Southwestern Virginia, Southern West Virginia and Eastern Kentucky. Division of Geology of the Virginia Department of Conservation and Development: Geological Survey Bulletin 1072-K. Hansen, MC. (1995) Landslides in Ohio. Ohio Department of Natural Resources, Division of Geological Survey: GeoFacts, No. 8.

16. Scheffel, ER. (1920) "Slides" in the Conemaugh Formation near Morgantown, West Virginia. The Journal of Geology: Vol. 28, No. 4, pp. 340-355.

17. USDA Forest Service. 2009. Lower Williams Vegetation, Final Environmental Impact Statement, Monongahela National Forest. U.S. Dept. of Agriculture, Forest Service, Eastern Region.

18. D.G. Honegger Consulting (2015). Review of Potential Seismic Hazards Along the Proposed Route of the Mountain Valley Pipeline. Letter dated September 19, 2015 from D.G. Honegger Consulting to Mountain Valley Pipeline LLC.

19. Schultz, A. P., and Southworth, C. S. (1987). Landslides of Eastern North America. Papers presented at the Southeastern Section Geological Society of America Symposium, March 26, 1987. U.S. Geological Survey Circular 1008.

20. Schultz, A. P., and Southworth, C. S. (1989). Large Bedrock Landslides of the Appalachian Valley and Ridge Province of Eastern North America. Geological Society of America Special Paper 236, p 57-74.

21. Wieczorek, G. F. and Snyder, J. B. (2009). Monitoring Slope Movements. in Young, R., and Norby, L., Geological Monitoring: Boulder, Colorado, Geological Society of America, p. 245-271.

Responses to Data Requests

Attachment DR2 General-7c2

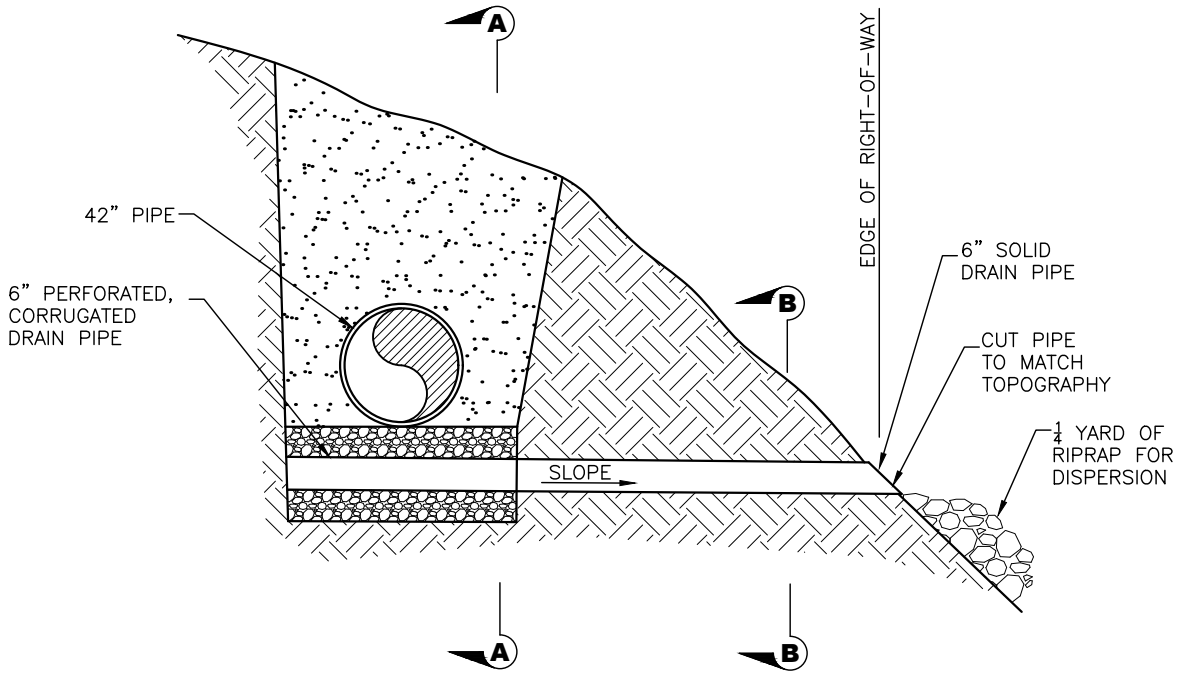

MAINLINE CROSS SECTION

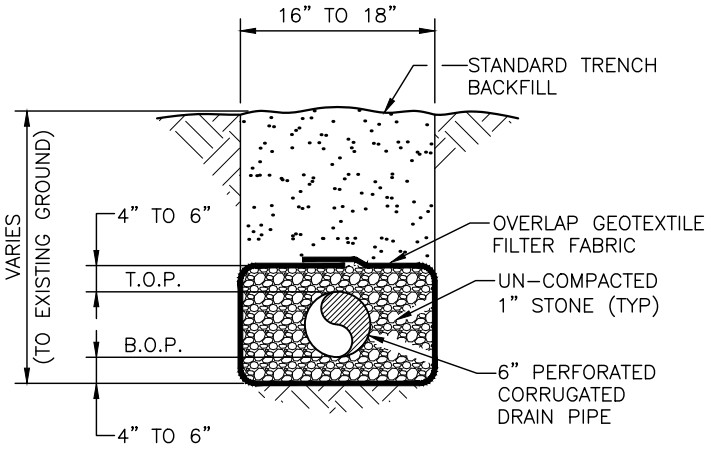

SECTION A-A

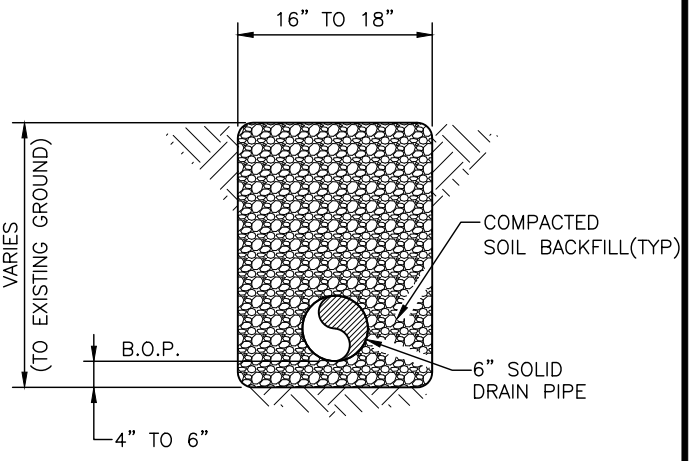

SECTION B-B

NOTES

1. LOW POINT DITCH DRAINS SHALL BE INSTALLED AT LOCATIONS SPECIFIED IN THE APPROVED EROSION & SEDIMENTATION CONTROL PLAN, AND AS DIRECTED BY THE ENVIRONMENTAL INSPECTOR.
2. FILL STONE SHOULD BE 1" AGGREGATE WITHOUT FINES, CRUSHER RUN WITHOUT FINES, OR EQUIVALENT.
3. DRAIN PIPE TO BE CONNECTED USING STANDARD PIPE COLLARS.

THIS TYPICAL CONSTRUCTION DETAIL IS INTENDED TO PROVIDE GUIDANCE TO THE PIPELINE CONTRACTOR. THE ACTUAL CONSTRUCTION TECHNIQUES MAY DIFFER DEPENDING UPON FIELD CONDITIONS AND OR REGULATORY REQUIREMENTS.

DRAWN	JIL	DATE	10/6/2016
CHECKED	MMF	DATE	10/6/2016
APP'D	XXX	DATE	10/6/2016
SCALE	N.T.S.	SHEET	1 OF 1
JOB NO.			
PROJECT ID: PXXXX			

Mountain Valley PIPELINE

DESIGN ENGINEERING

TYPICAL CONSTRUCTION DETAIL

SIDEHILL LOW-POINT DRAIN TYPICAL

DRAWING NO.	REV.
MVP-24	0

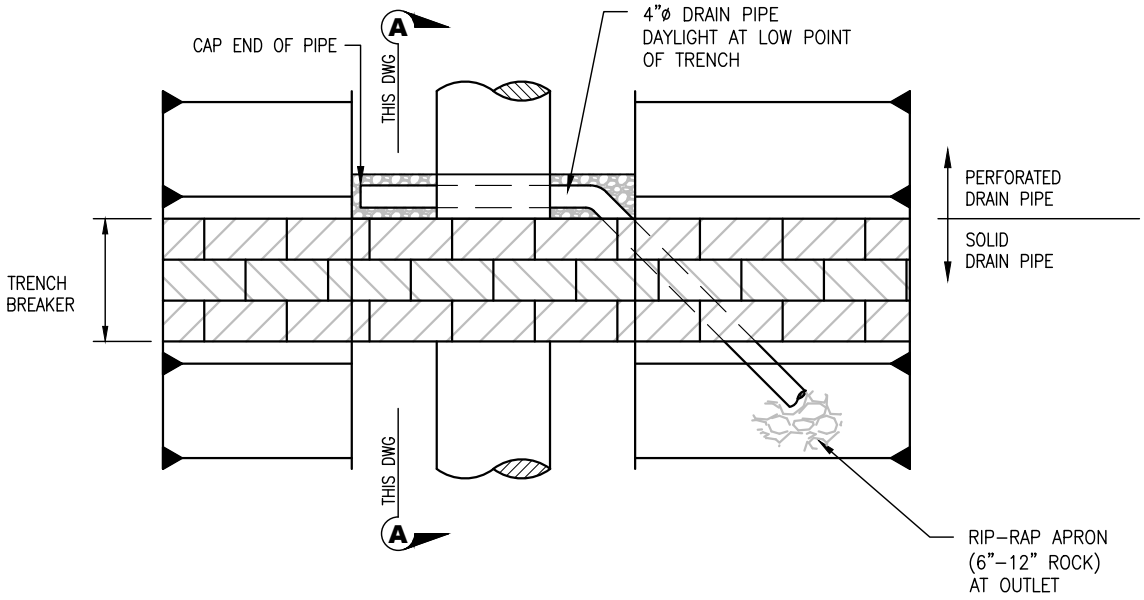

PLAN
SCALE: NOT TO SCALE

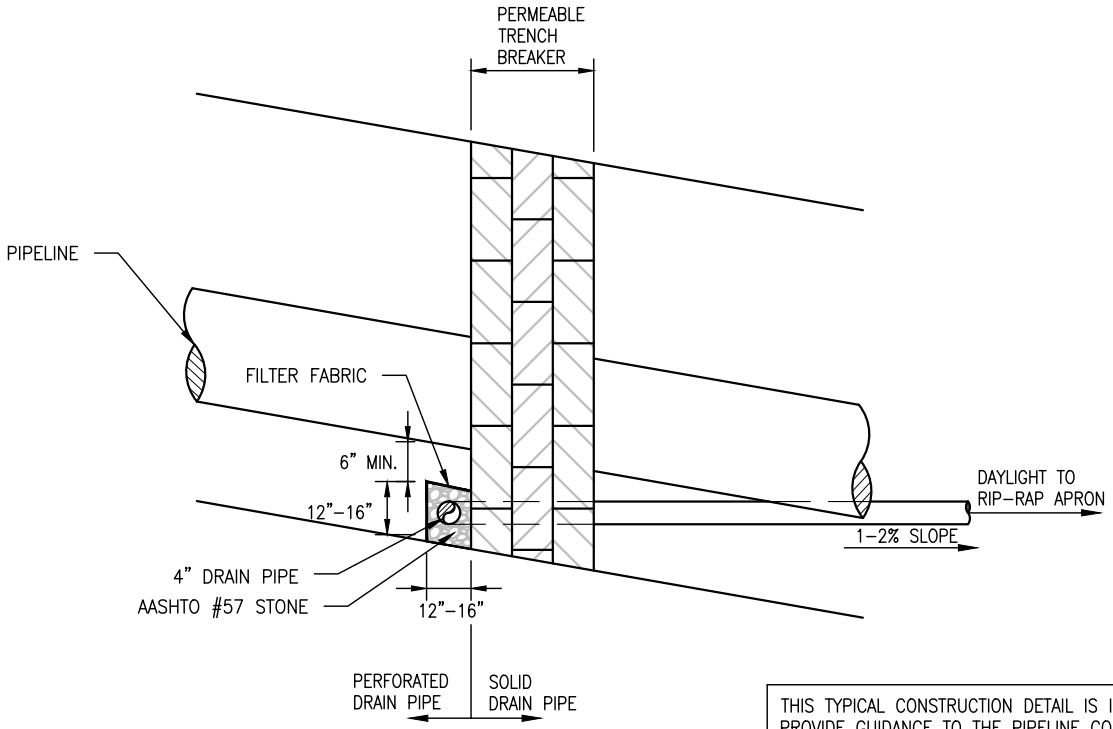

SECTION A-A
SCALE: NOT TO SCALE

THIS TYPICAL CONSTRUCTION DETAIL IS INTENDED TO PROVIDE GUIDANCE TO THE PIPELINE CONTRACTOR. THE ACTUAL CONSTRUCTION TECHNIQUES MAY DIFFER DEPENDING UPON FIELD CONDITIONS AND OR REGULATORY REQUIREMENTS.

DRAWN	TDD	DATE	2/03/2016
CHECKED	MMF	DATE	2/03/2016
APP'D		DATE	
SCALE	N.T.S.	SHEET	1 OF 1
JOB NO.			
PROJECT ID: PXXXX			

Mountain Valley PIPELINE

DESIGN ENGINEERING

TYPICAL CONSTRUCTION DETAIL

TRENCH BREAKER DAYLIGHT DRAIN

DRAWING NO.	REV.
MVP-35	0

Plotted by: Lee, Joshua I. on: October 11, 2016 - 2:26 PM

File Path: C:\Vault Working\Systems\MVP\H-600\H-600 Bid Package\Drawing Files\Design Files\Mechanical\Construction Typicals\MVP-35.dwg

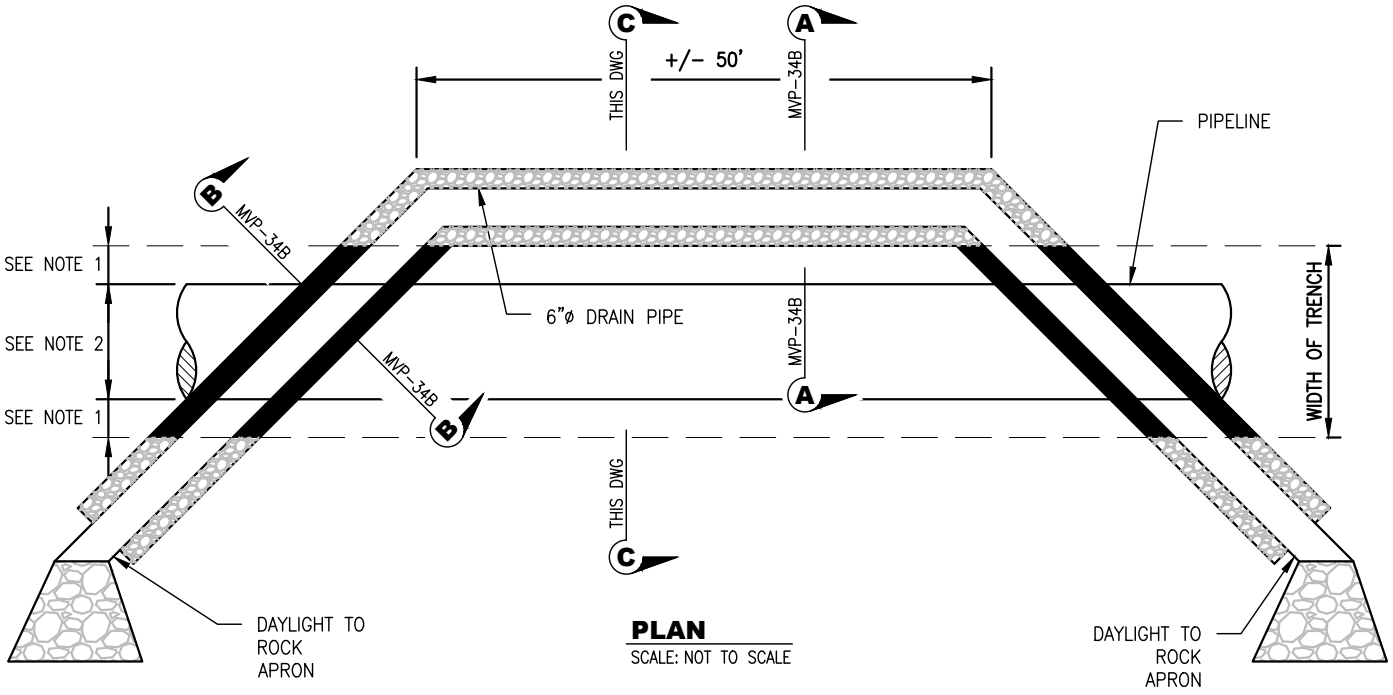

PLAN
SCALE: NOT TO SCALE

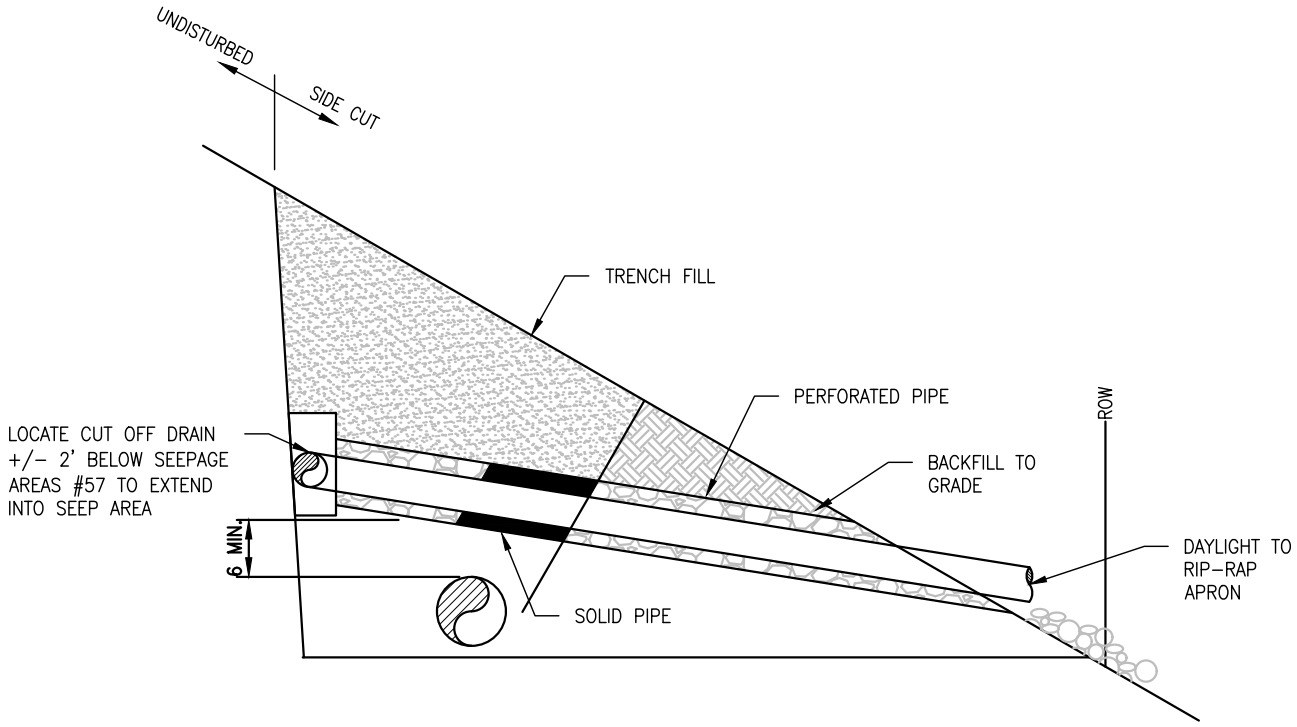

SECTION C-C
SCALE: NOT TO SCALE

NOTES:
1. PERFORATED PIPE SURROUNDED BY #57 STONE.
2. SOLID PIPE (IN TRENCH) SURROUNDED BY TRENCH BACKFILL.

THIS TYPICAL CONSTRUCTION DETAIL IS INTENDED TO PROVIDE GUIDANCE TO THE PIPELINE CONTRACTOR. THE ACTUAL CONSTRUCTION TECHNIQUES MAY DIFFER DEPENDING UPON FIELD CONDITIONS AND OR REGULATORY REQUIREMENTS.

DRAWN	TDD	DATE	2/03/2016
CHECKED	MMF	DATE	2/03/2016
APP'D		DATE	
SCALE	N.T.S.	SHEET	1 OF 2
JOB NO.			
PROJECT ID:	PXXXX		

Mountain Valley PIPELINE

DESIGN ENGINEERING

TYPICAL CONSTRUCTION DETAIL

CUTOFF DRAIN–SIDEHILL

DRAWING NO.	REV.
MVP–36A	0

Plotted by: Lee, Joshua I. on: October 11, 2016 - 2:26 PM

File Path: C:\Vault Working\Systems\MVP\H-600\H-600 Bid Package\Drawing Files\Design Files\Mechanical\Construction Typicals\MVP-36a.dwg

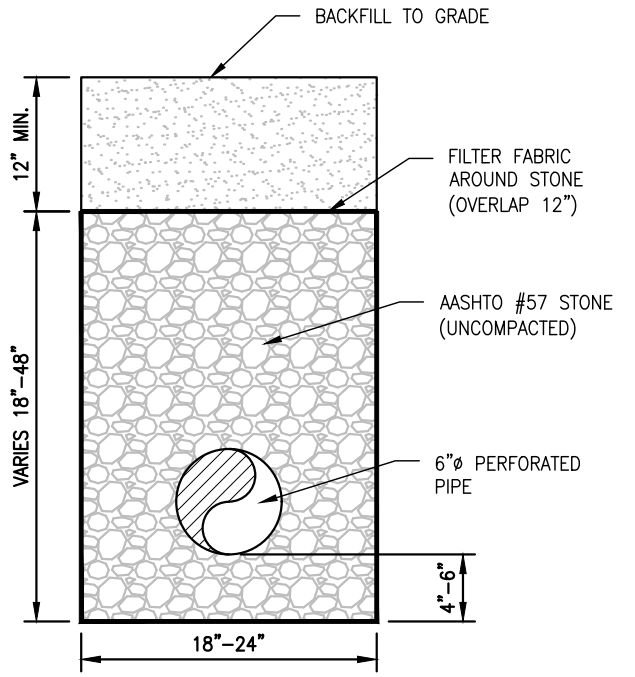

SECTION A-A

SCALE: NOT TO SCALE

FROM MVP–34A

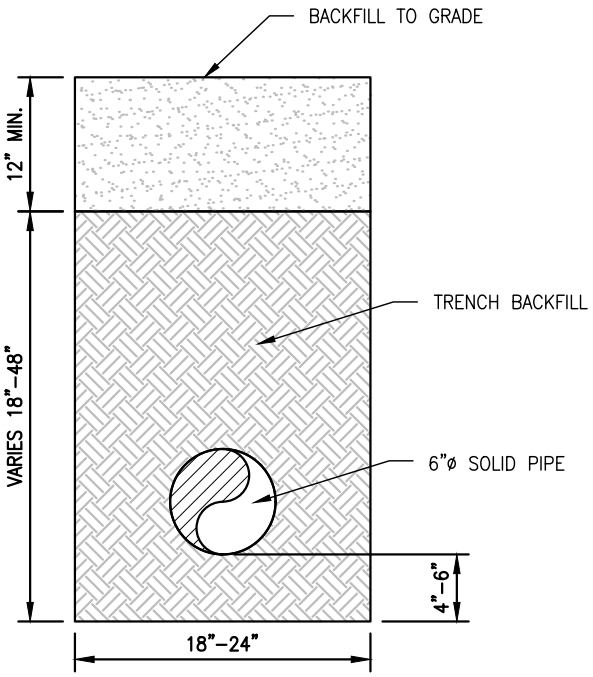

SECTION B-B

SCALE: NOT TO SCALE

FROM MVP–34A

THIS TYPICAL CONSTRUCTION DETAIL IS INTENDED TO PROVIDE GUIDANCE TO THE PIPELINE CONTRACTOR. THE ACTUAL CONSTRUCTION TECHNIQUES MAY DIFFER DEPENDING UPON FIELD CONDITIONS AND OR REGULATORY REQUIREMENTS.

DRAWN	TDD	DATE	2/03/2016
CHECKED	MMF	DATE	2/03/2016
APP'D		DATE	
SCALE	N.T.S.	SHEET	2 OF 2
JOB NO.			
PROJECT ID: PXXXX			

Mountain Valley PIPELINE

DESIGN ENGINEERING

TYPICAL CONSTRUCTION DETAIL

CUTOFF DRAIN–SIDEHILL

DRAWING NO.	REV.
MVP–36B	0

Plotted by: Lee, Joshua I. on: October 11, 2016 - 2:26 PM

File Path: C:\Vault Working\Systems\MVP\H-600\H-600 Bid Package\Drawing Files\Design Files\Mechanical\Construction Typicals\MVP-36b.dwg

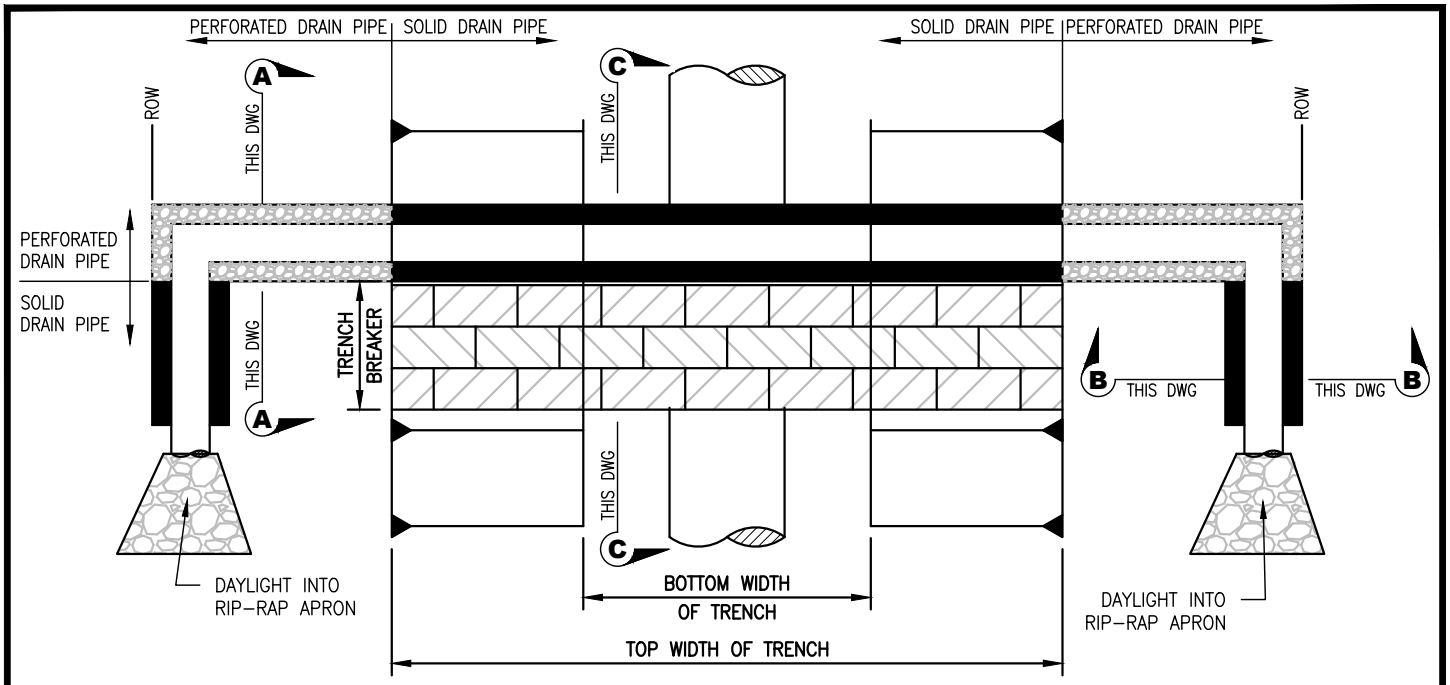

PLAN
SCALE: NOT TO SCALE

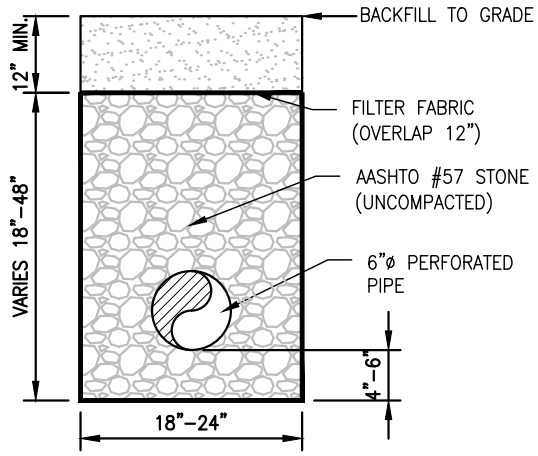

SECTION A-A
SCALE: NOT TO SCALE

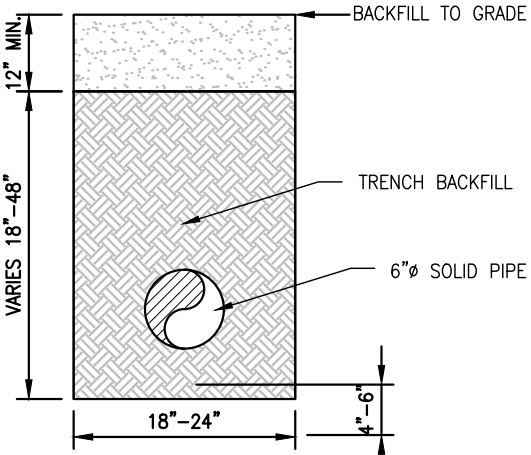

SECTION B-B
SCALE: NOT TO SCALE

NOTES:
1. EACH CUTOFF DRAIN SHALL UTILIZE A TRENCH BREAKER DRAIN (SEE DETAIL 1) TO DRAIN THE TRENCH.

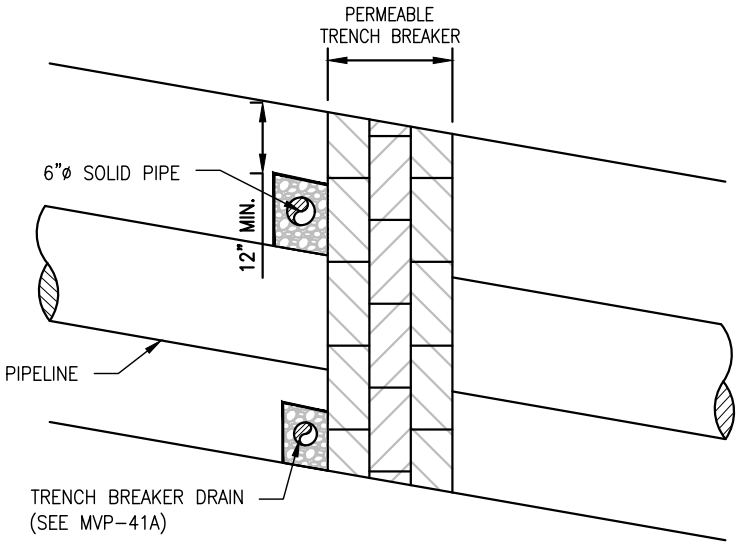

SECTION C-C
SCALE: NOT TO SCALE

THIS TYPICAL CONSTRUCTION DETAIL IS INTENDED TO PROVIDE GUIDANCE TO THE PIPELINE CONTRACTOR. THE ACTUAL CONSTRUCTION TECHNIQUES MAY DIFFER DEPENDING UPON FIELD CONDITIONS AND OR REGULATORY REQUIREMENTS.

DRAWN	TDD	DATE	2/03/2016
CHECKED	MMF	DATE	2/03/2016
APP'D		DATE	
SCALE	N.T.S.	SHEET	1 OF 1
JOB NO.			
PROJECT ID: PXXXX			

Mountain Valley PIPELINE

DESIGN ENGINEERING

TYPICAL CONSTRUCTION DETAIL

CUTOFF DRAIN–PLANAR

DRAWING NO.	REV.
MVP–37	0

Plotted by: Lee, Joshua I. on: October 11, 2016 - 2:26 PM

File Path: C:\Vault Working\Systems\MVP\H-600\H-600 Bid Package\Drawing Files\Design Files\Mechanical\Construction Typicals\MVP-37.dwg

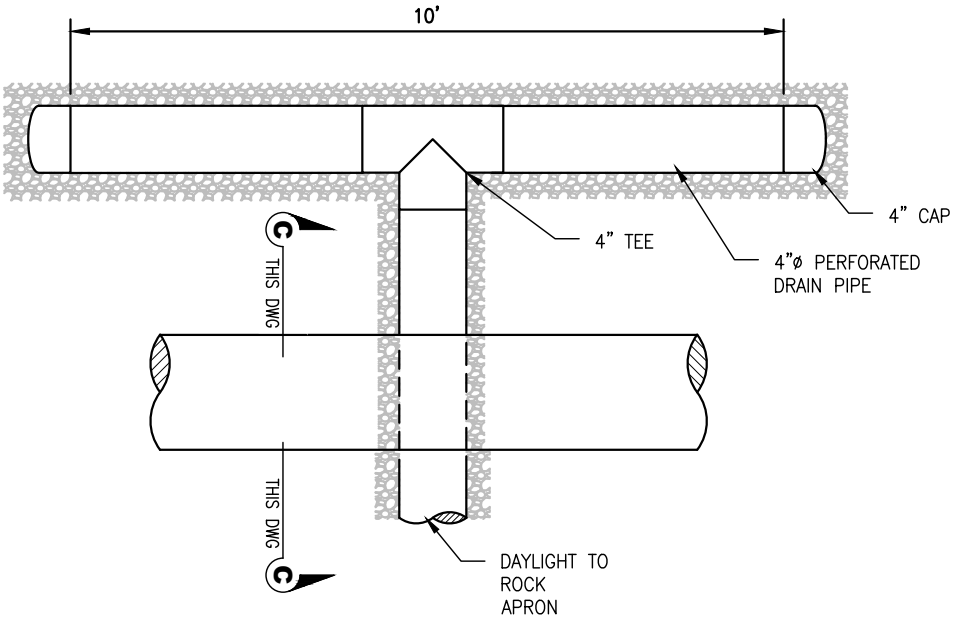

PLAN
SCALE: NOT TO SCALE

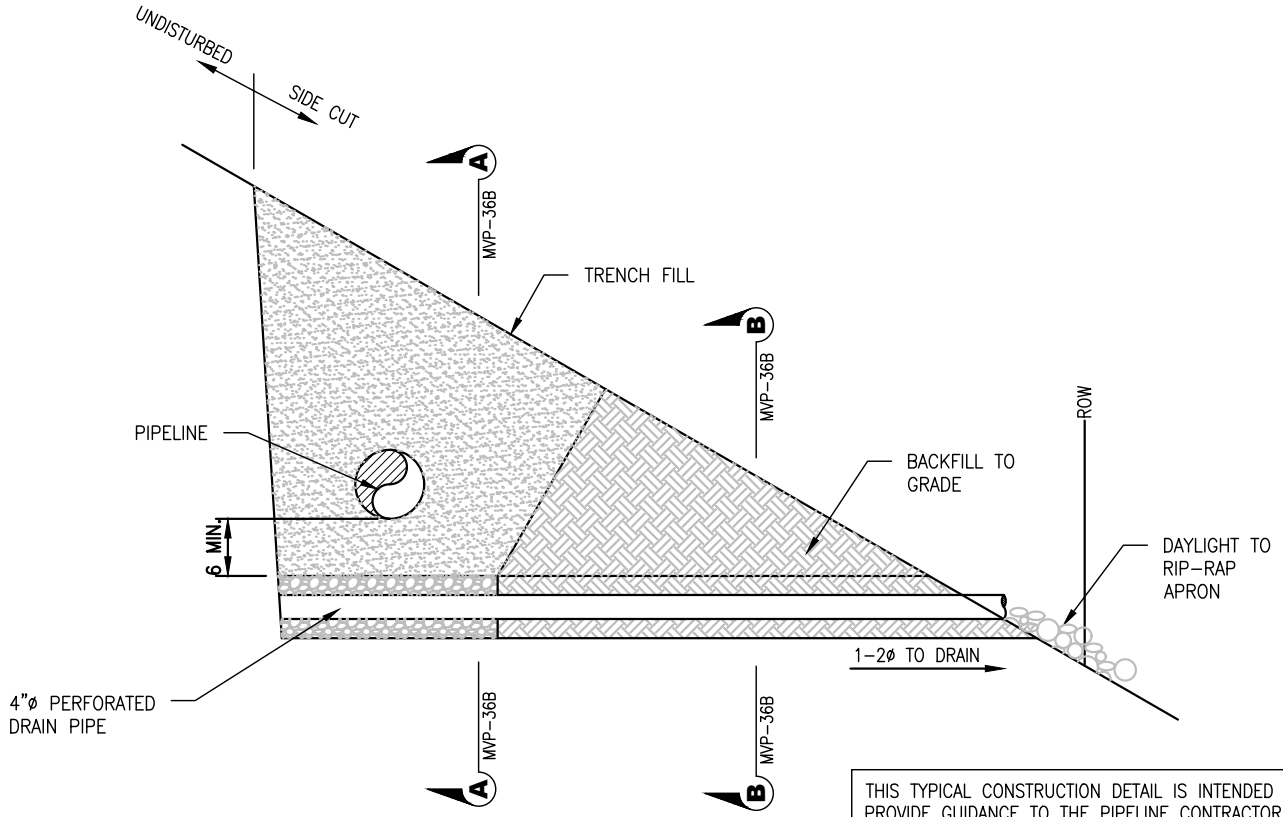

C-C
SCALE: NOT TO SCALE

THIS TYPICAL CONSTRUCTION DETAIL IS INTENDED TO PROVIDE GUIDANCE TO THE PIPELINE CONTRACTOR. THE ACTUAL CONSTRUCTION TECHNIQUES MAY DIFFER DEPENDING UPON FIELD CONDITIONS AND OR REGULATORY REQUIREMENTS.

DRAWN	TDD	DATE	2/03/2016
CHECKED	MMF	DATE	2/03/2016
APP'D		DATE	
SCALE	N.T.S.	SHEET	1 OF 2
JOB NO.			
PROJECT ID:			
PXXXX			

Mountain Valley PIPELINE

DESIGN ENGINEERING

TYPICAL CONSTRUCTION DETAIL

TRANSVERSE TRENCH DRAIN

DRAWING NO.	REV.
MVP-38A	0

Plotted by: Lee, Joshua I. on: October 11, 2016 - 2:26 PM

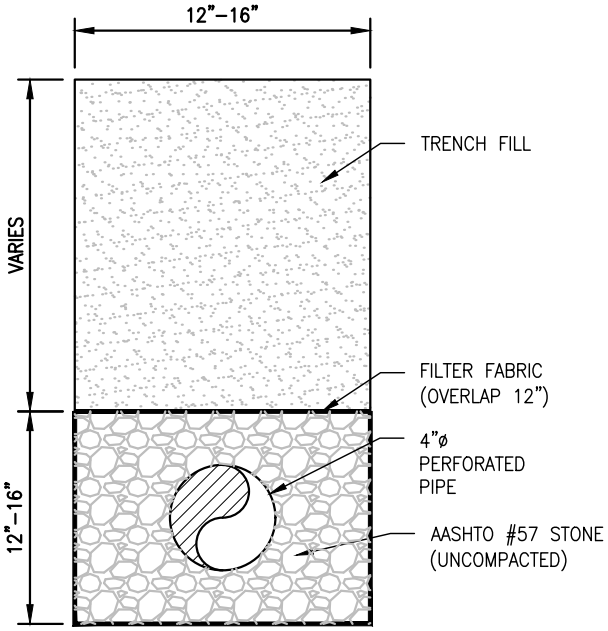

SECTION A-A
SCALE: NOT TO SCALE
FROM MVP–36A

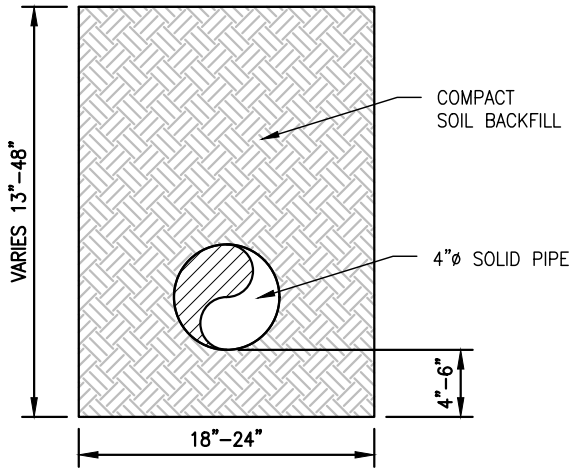

SECTION B-B
SCALE: NOT TO SCALE
FROM MVP–36A

THIS TYPICAL CONSTRUCTION DETAIL IS INTENDED TO PROVIDE GUIDANCE TO THE PIPELINE CONTRACTOR. THE ACTUAL CONSTRUCTION TECHNIQUES MAY DIFFER DEPENDING UPON FIELD CONDITIONS AND OR REGULATORY REQUIREMENTS.

DRAWN	TDD	DATE	2/03/2016
CHECKED	MMF	DATE	2/03/2016
APP'D		DATE	
SCALE	N.T.S.	SHEET	2 OF 2
JOB NO.			
PROJECT ID: PXXXX			

Mountain Valley PIPELINE

DESIGN ENGINEERING

TYPICAL CONSTRUCTION DETAIL

TRANSVERSE TRENCH DRAIN

DRAWING NO.	REV.
MVP–38B	0

Plotted by: Lee, Joshua I. on: October 11, 2016 - 2:26 PM

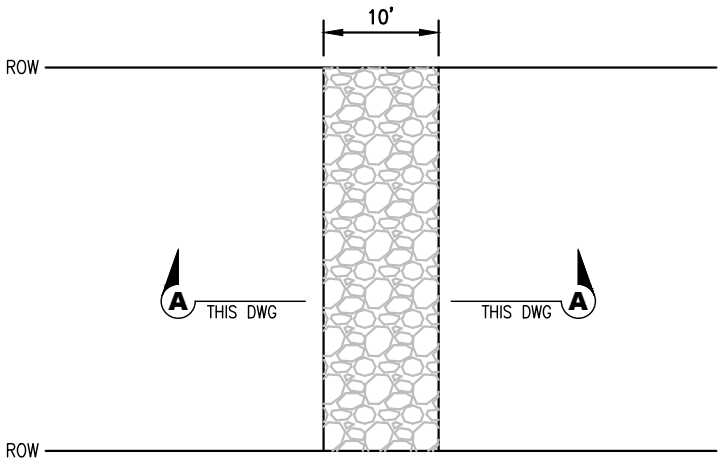

PLAN
SCALE: NOT TO SCALE

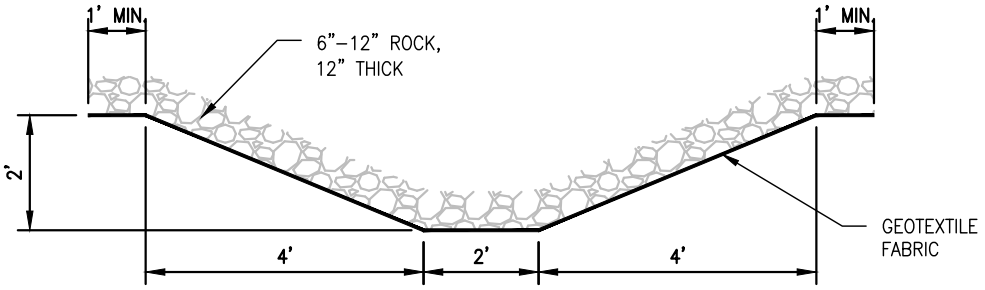

SECTION A-A
SCALE: NOT TO SCALE

THIS TYPICAL CONSTRUCTION DETAIL IS INTENDED TO PROVIDE GUIDANCE TO THE PIPELINE CONTRACTOR. THE ACTUAL CONSTRUCTION TECHNIQUES MAY DIFFER DEPENDING UPON FIELD CONDITIONS AND OR REGULATORY REQUIREMENTS.

DRAWN	TDD	DATE	2/03/2016
CHECKED	MMF	DATE	2/03/2016
APP'D		DATE	
SCALE	N.T.S.	SHEET	1 OF 1
JOB NO.			
PROJECT ID: PXXXX			

Mountain Valley PIPELINE

DESIGN ENGINEERING

TYPICAL CONSTRUCTION DETAIL

ROCK LINED SWALE

DRAWING NO.	REV.
MVP–39	0

Plotted by: Lee, Joshua I. on: October 11, 2016 - 2:26 PM

File Path: C:\Vault Working\Systems\MVP\H-600\H-600 Bid Package\Drawing Files\Design Files\Mechanical\Construction Typicals\MVP-39.dwg

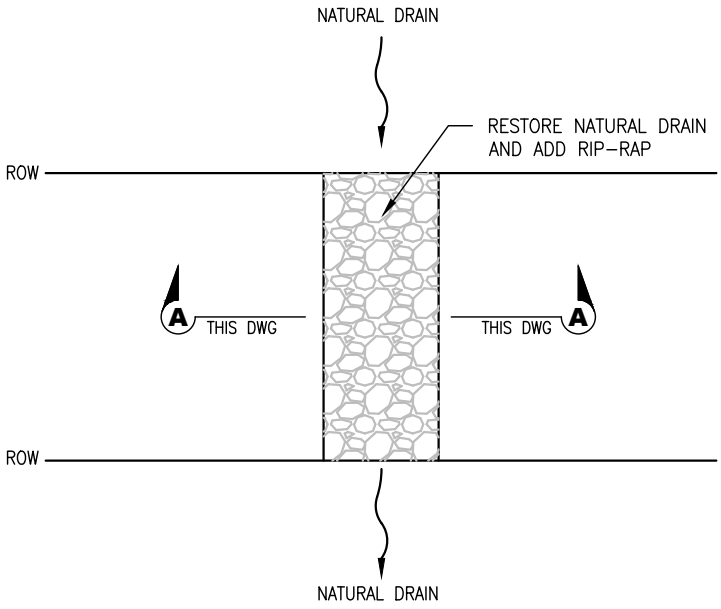

PLAN
SCALE: NOT TO SCALE

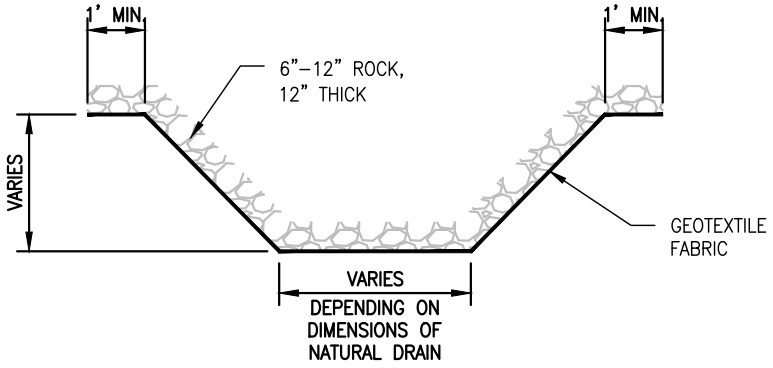

SECTION A-A
SCALE: NOT TO SCALE

THIS TYPICAL CONSTRUCTION DETAIL IS INTENDED TO PROVIDE GUIDANCE TO THE PIPELINE CONTRACTOR. THE ACTUAL CONSTRUCTION TECHNIQUES MAY DIFFER DEPENDING UPON FIELD CONDITIONS AND OR REGULATORY REQUIREMENTS.

DRAWN	TDD	DATE	2/03/2016
CHECKED	MMF	DATE	2/03/2016
APP'D		DATE	
SCALE	N.T.S.	SHEET	1 OF 1
JOB NO.			
PROJECT ID: PXXXX			

Mountain Valley PIPELINE

DESIGN ENGINEERING

TYPICAL CONSTRUCTION DETAIL

RIP-RAP NATURAL DRAIN

DRAWING NO.	REV.
MVP-40	0

Plotted by: Lee, Joshua I. on: October 11, 2016 - 2:26 PM

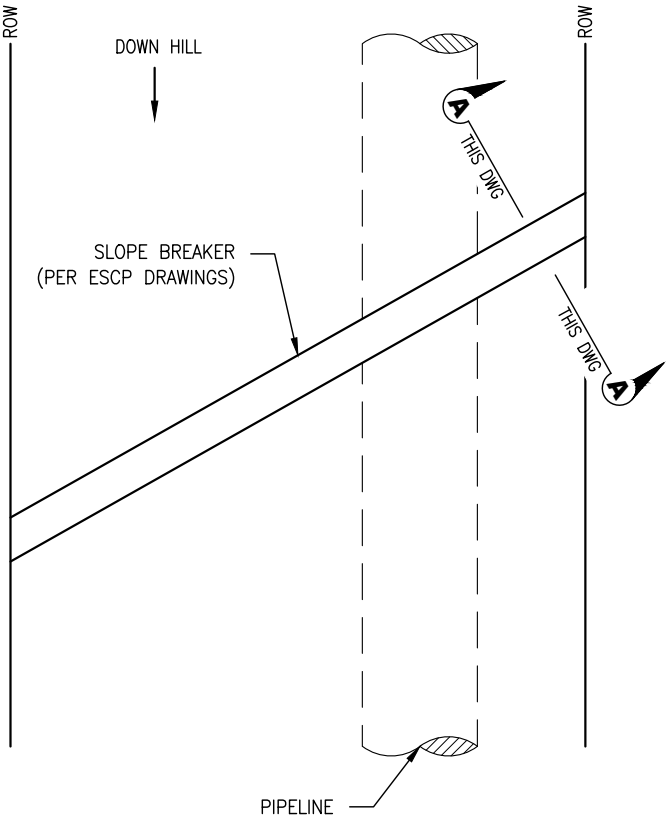

PLAN
SCALE: NOT TO SCALE

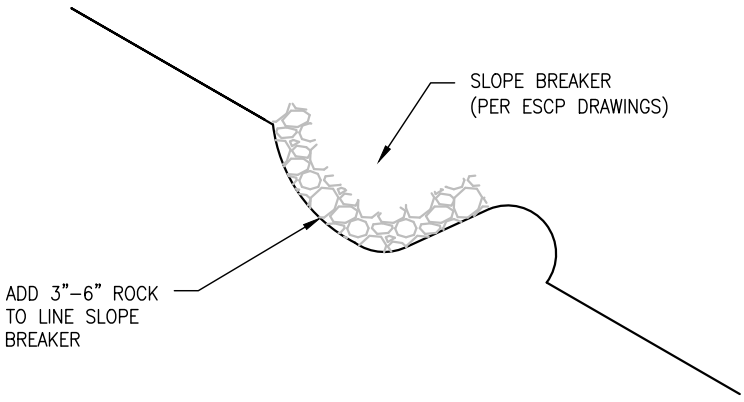

SECTION A-A
SCALE: NOT TO SCALE

THIS TYPICAL CONSTRUCTION DETAIL IS INTENDED TO PROVIDE GUIDANCE TO THE PIPELINE CONTRACTOR. THE ACTUAL CONSTRUCTION TECHNIQUES MAY DIFFER DEPENDING UPON FIELD CONDITIONS AND OR REGULATORY REQUIREMENTS.

DRAWN	TDD	DATE	2/03/2016
CHECKED	MMF	DATE	2/03/2016
APP'D		DATE	
SCALE	N.T.S.	SHEET	1 OF 1
JOB NO.			
PROJECT ID: PXXXX			

Mountain Valley PIPELINE

DESIGN ENGINEERING

TYPICAL CONSTRUCTION DETAIL

RIP–RAP SLOPE BREAKERS

DRAWING NO.	REV.
MVP–41	0

Plotted by: Lee, Joshua I. on: October 11, 2016 - 2:26 PM

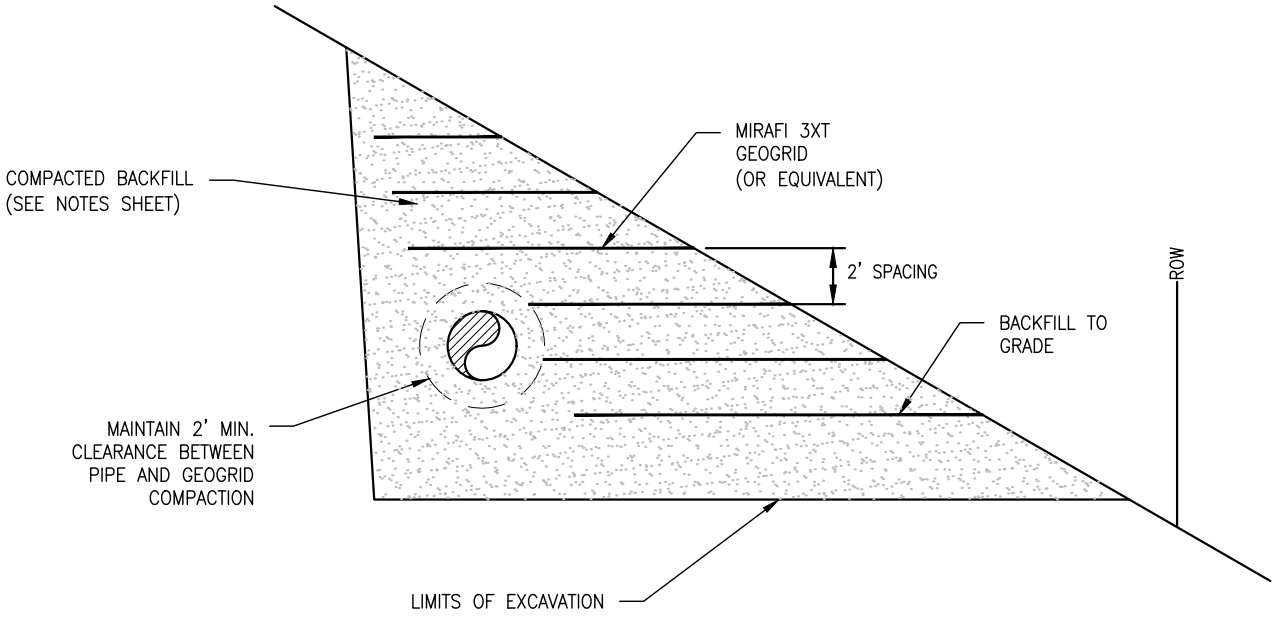

THIS TYPICAL CONSTRUCTION DETAIL IS INTENDED TO PROVIDE GUIDANCE TO THE PIPELINE CONTRACTOR. THE ACTUAL CONSTRUCTION TECHNIQUES MAY DIFFER DEPENDING UPON FIELD CONDITIONS AND OR REGULATORY REQUIREMENTS.

DRAWN	TDD	DATE	2/03/2016
CHECKED	MMF	DATE	2/03/2016
APP'D		DATE	
SCALE	N.T.S.	SHEET	1 OF 3
JOB NO.			
PROJECT ID: PXXXX			

Mountain Valley PIPELINE

DESIGN ENGINEERING

TYPICAL CONSTRUCTION DETAIL

GEOGRID–SIDEHILL

DRAWING NO.	REV.
MVP–42A	0

Plotted by: Lee, Joshua I. on: October 11, 2016 - 2:26 PM

File Path: C:\Vault Working\Systems\MVP\H-600\H-600 Bid Package\Drawing Files\Design Files\Mechanical\Construction Typicals\MVP-42A.dwg

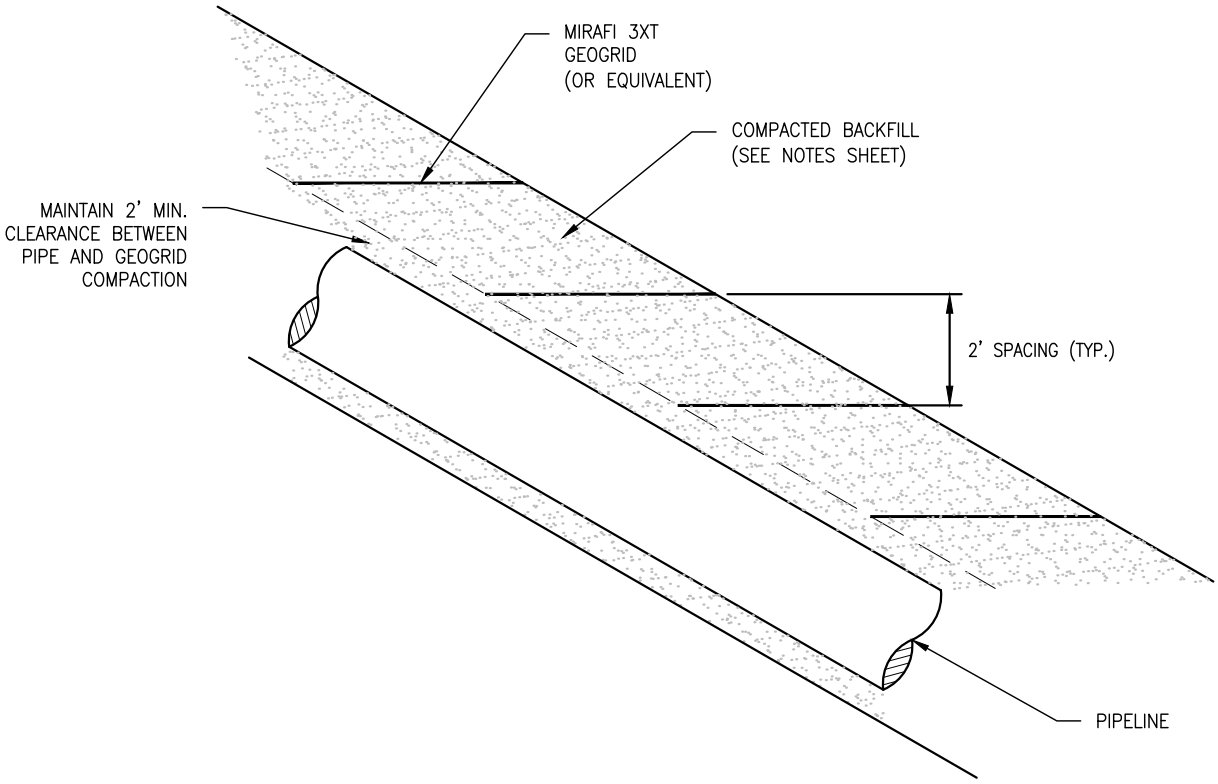

SECTION VIEW
SCALE: NOT TO SCALE

THIS TYPICAL CONSTRUCTION DETAIL IS INTENDED TO PROVIDE GUIDANCE TO THE PIPELINE CONTRACTOR. THE ACTUAL CONSTRUCTION TECHNIQUES MAY DIFFER DEPENDING UPON FIELD CONDITIONS AND OR REGULATORY REQUIREMENTS.

DRAWN	TDD	DATE	2/03/2016
CHECKED	MMF	DATE	2/03/2016
APP'D		DATE	
SCALE	N.T.S.	SHEET	2 OF 3
JOB NO.			
PROJECT ID: PXXXX			

Mountain Valley PIPELINE

DESIGN ENGINEERING

SLIDE MITIGATION DETAIL

GEOGRID–PLANAR

DRAWING NO.	REV.
MVP–42B	0

Plotted by: Lee, Joshua I. on: October 11, 2016 - 2:26 PM

COMPACTION NOTES

1) ALL ROCKS LARGER THAN 6 INCHES IN SIZE, AND MORE THANK 10 PERCENT BY VOLUME SHOULD BE REMOVED AND PROPERLY DISPOSED FROM THE BACKFILL MATERIAL.
2) THE SUBGRADE AT THE BASE OF THE EXCAVATION SHOULD BE PROOFROLLED WITH A PNEUMATIC TIRED ROLLER OR VEHICLE.
3) THE EXCAVATED AREA SHALL BE BACKFILLED WITH THE CLEANED EXCAVATED SOIL MATERIAL AND COMPACTED IN PLACE.
4) BACKFILL OPERATIONS SHALL BE PERFORMED WHEN SOIL IS SUITABLE FOR COMPACTION (I.E., NOT IMMEDIATELY FOLLOWING A LARGE RAIN, SNOW, OR ICE EVENT). FROZEN FILL SHALL NOT BE USED.
5) THE BACKFILL SHALL BE PLACED IN COMPACTED LIFTS NO GREATER THAN 12 INCHES.
6) MAINTAIN A MINIMUM 2FT CLEARANCE BETWEEN COMPACTION ACTIVITY AND THE GAS PIPELINE.

GRAVEL DRAIN NOTES

1) GEOTEXTILE FABRIC SHALL BE TENCATE MIRAFI 140N OR APPROVED EQUIVALENT.
2) THE GEOTEXTILE FABRIC SHALL BE STORED UNDAMAGED PURSUANT TO MANUFACTURERS RECOMMENDATIONS.
3) DO NOT OPERATE CONSTRUCTION EQUIPMENT DIRECTLY ON THE GEOTEXTILE FABRIC.
4) DRAINAGE AGGREGATE SHALL MEET THE REQUIREMENTS OF AASHTO NO. 57 STONE.
5) DRAINAGE AGGREGATE SHALL NOT BE COMPACTED.

GEOGRID NOTES

1) GEOGRID REINFORCEMENT SHALL BE TENCATE MIRAFI 3XT OR APPROVED EQUIVALENT.
2) THE GEOGRID MATERIAL SHALL BE STORED UNDAMAGED PURSUANT TO MANUFACTURERS RECOMMENDATIONS.
3) GEOGRID SHALL BE PLACED HORIZONTALLY ON THE BACKFILL WITH THE PRINCIPAL STRENGTH DIRECTION PERPENDICULAR TO THE FACE OF THE SLOPE. ADJACENT PIECES OF PRIMARY GEOGRID SHALL NOT OVERLAP BUT ARE TO BE BUTTED SIDE TO SIDE.
4) REMOVE ALL SLACK IN THE GEOGRID MATERIAL AND ANCHOR AS NECESSARY WITH PINS, OR BAGS TO PREVENT SLACK FROM DEVELOPMENT DURING FILL PLACEMENT AND COMPACTION.
5) FILL IS TO BE PLACED AND SPREAD DIRECTLY ON THE GEOGRID MATERIAL WITH RUBBER TIRED EQUIPMENT ONLY. SPEEDS ARE TO BE KEPT SLOW WITH AS FEW STOPS AND TURNS AS PRACTICAL.
6) DO NOT OPERATE TRACKED EQUIPMENT DIRECTLY ON THE GEOGRID MATERIAL.
7) MAINTAIN A MINIMUM 2FT CLEARANCE BETWEEN GEOGRID MATERIAL AND THE GAS PIPELINE.

THIS TYPICAL CONSTRUCTION DETAIL IS INTENDED TO PROVIDE GUIDANCE TO THE PIPELINE CONTRACTOR. THE ACTUAL CONSTRUCTION TECHNIQUES MAY DIFFER DEPENDING UPON FIELD CONDITIONS AND OR REGULATORY REQUIREMENTS.

DRAWN	TDD	DATE	2/03/2016
CHECKED	MMF	DATE	2/03/2016
APP'D		DATE	
SCALE	N.T.S.	SHEET	3 OF 3
JOB NO.			
PROJECT ID: PXXXX			

Mountain Valley PIPELINE

DESIGN ENGINEERING

TYPICAL CONSTRUCTION DETAIL

GEOGRID NOTES

DRAWING NO.	REV.
MVP-42C	0

Plotted by: Lee, Joshua I. on: October 11, 2016 - 2:27 PM

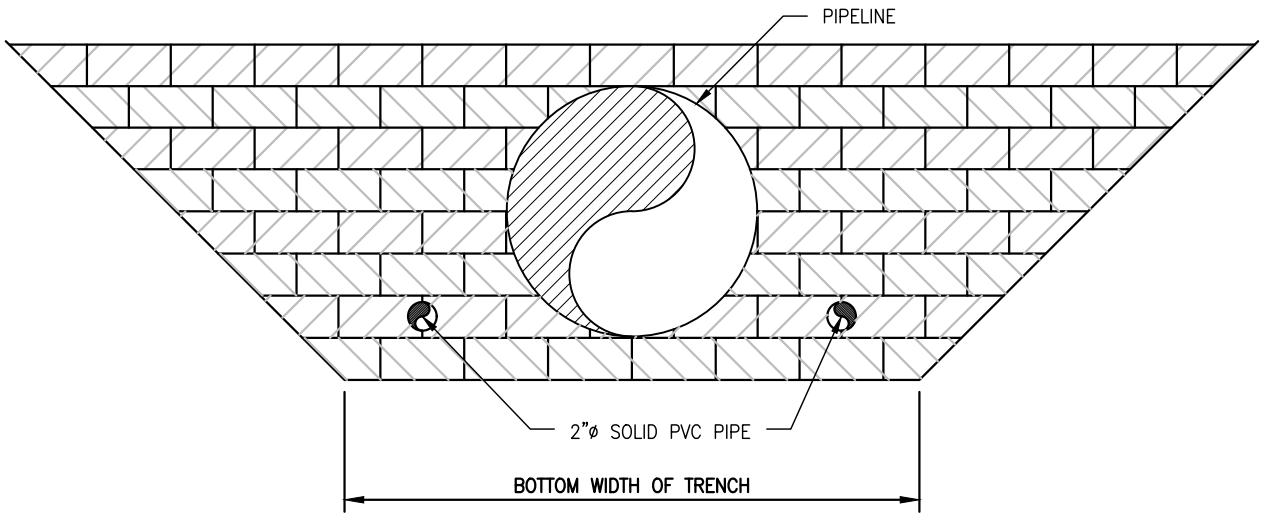

FRONT VIEW
SCALE: NOT TO SCALE

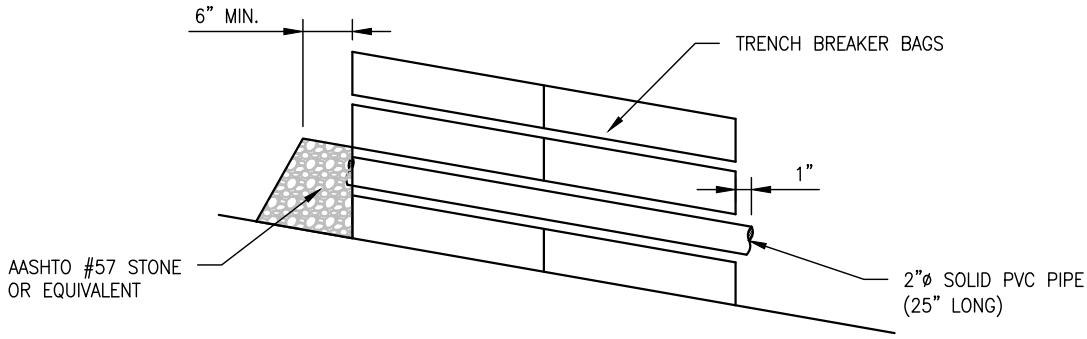

SECTION VIEW
SCALE: NOT TO SCALE

NOTES:
1. PLACE PVC DRAIN PIPE ON FIRST LAYER OF TRENCH BREAKER BAGS.
2. PLACE PVC DRAIN PIPE EQUADISTANT FROM THE OUTSIDE EDGE OF THE 30" GAS PIPE AND THE BOTTOM LIMITS OF THE TRENCH.
3. EXTEND PVC PIPE THROUGH ENTIRE TRENCH BREAKER AND EXTEND APPROX. 1" PAST END OF BREAKER.
4. AASHTO#57 STONE SHALL BE PLACED TO A MINIMUM 6" THICKNESS UPSLOPE OF THE DRAIN PIPE.

THIS TYPICAL CONSTRUCTION DETAIL IS INTENDED TO PROVIDE GUIDANCE TO THE PIPELINE CONTRACTOR. THE ACTUAL CONSTRUCTION TECHNIQUES MAY DIFFER DEPENDING UPON FIELD CONDITIONS AND OR REGULATORY REQUIREMENTS.

DRAWN	TDD	DATE	4/14/2016
CHECKED	MMF	DATE	4/14/2016
APP'D		DATE	
SCALE	N.T.S.	SHEET	1 OF 2
JOB NO.			
PROJECT ID: PXXXX			

Mountain Valley PIPELINE

DESIGN ENGINEERING

TYPICAL CONSTRUCTION DETAIL

TRENCH BREAKER
PASS-THROUGH DRAIN

DRAWING NO.	REV.
MVP-43A	0

Plotted by: Lee, Joshua I. on: October 11, 2016 - 2:27 PM

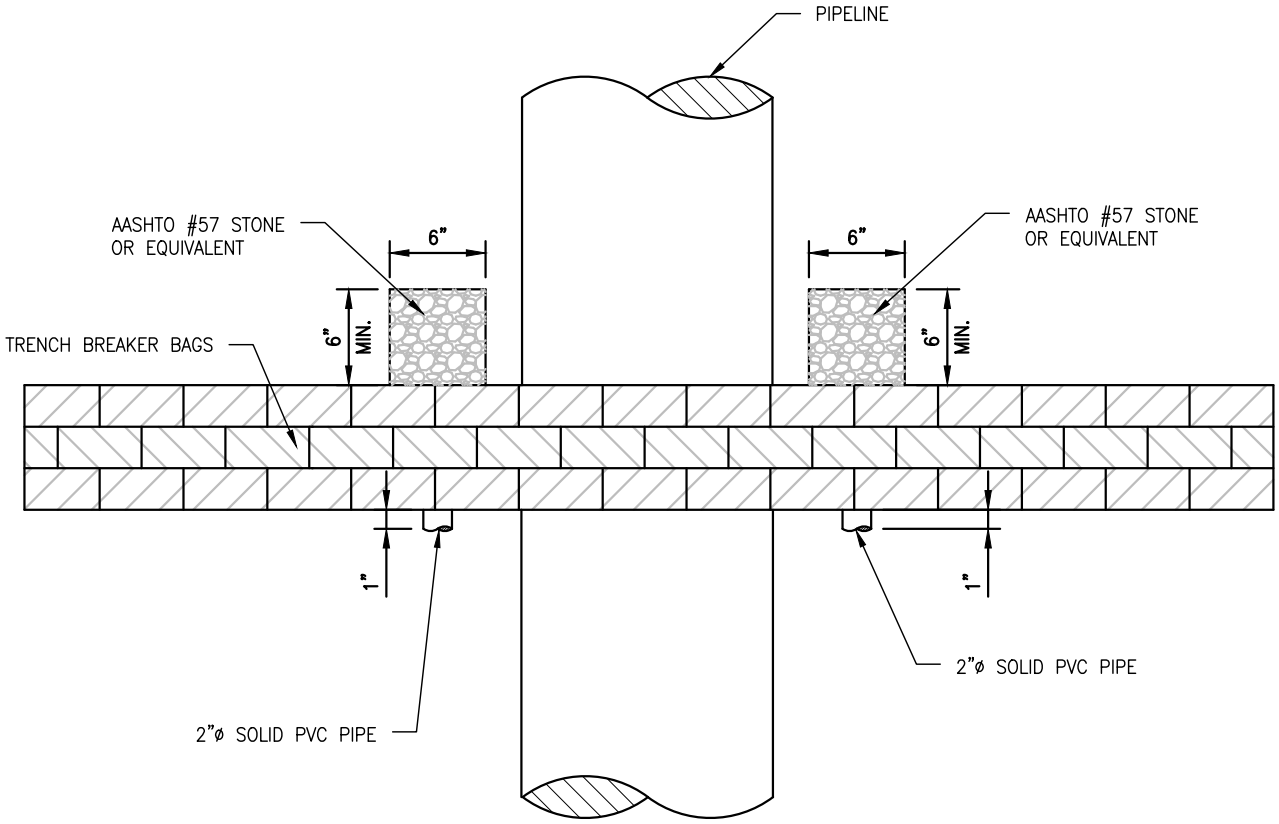

PLAN VIEW

SCALE: NOT TO SCALE

THIS TYPICAL CONSTRUCTION DETAIL IS INTENDED TO PROVIDE GUIDANCE TO THE PIPELINE CONTRACTOR. THE ACTUAL CONSTRUCTION TECHNIQUES MAY DIFFER DEPENDING UPON FIELD CONDITIONS AND OR REGULATORY REQUIREMENTS.

DRAWN	TDD	DATE	4/14/2016
CHECKED	MMF	DATE	4/14/2016
APP'D		DATE	
SCALE	N.T.S.	SHEET	2 OF 2
JOB NO.			
PROJECT ID: PXXXX			

Mountain Valley PIPELINE

DESIGN ENGINEERING

TYPICAL CONSTRUCTION DETAIL

TRENCH BREAKER
PASS-TROUGH DRAIN

DRAWING NO.	REV.
MVP-43B	0

Plotted by: Lee, Joshua I. on: October 11, 2016 - 2:27 PM

File Path: C:\Vault Working\Systems\MVP\H-600\H-600 Bid Package\Drawing Files\Design Files\Mechanical\Construction Typicals\MVP-43B.dwg

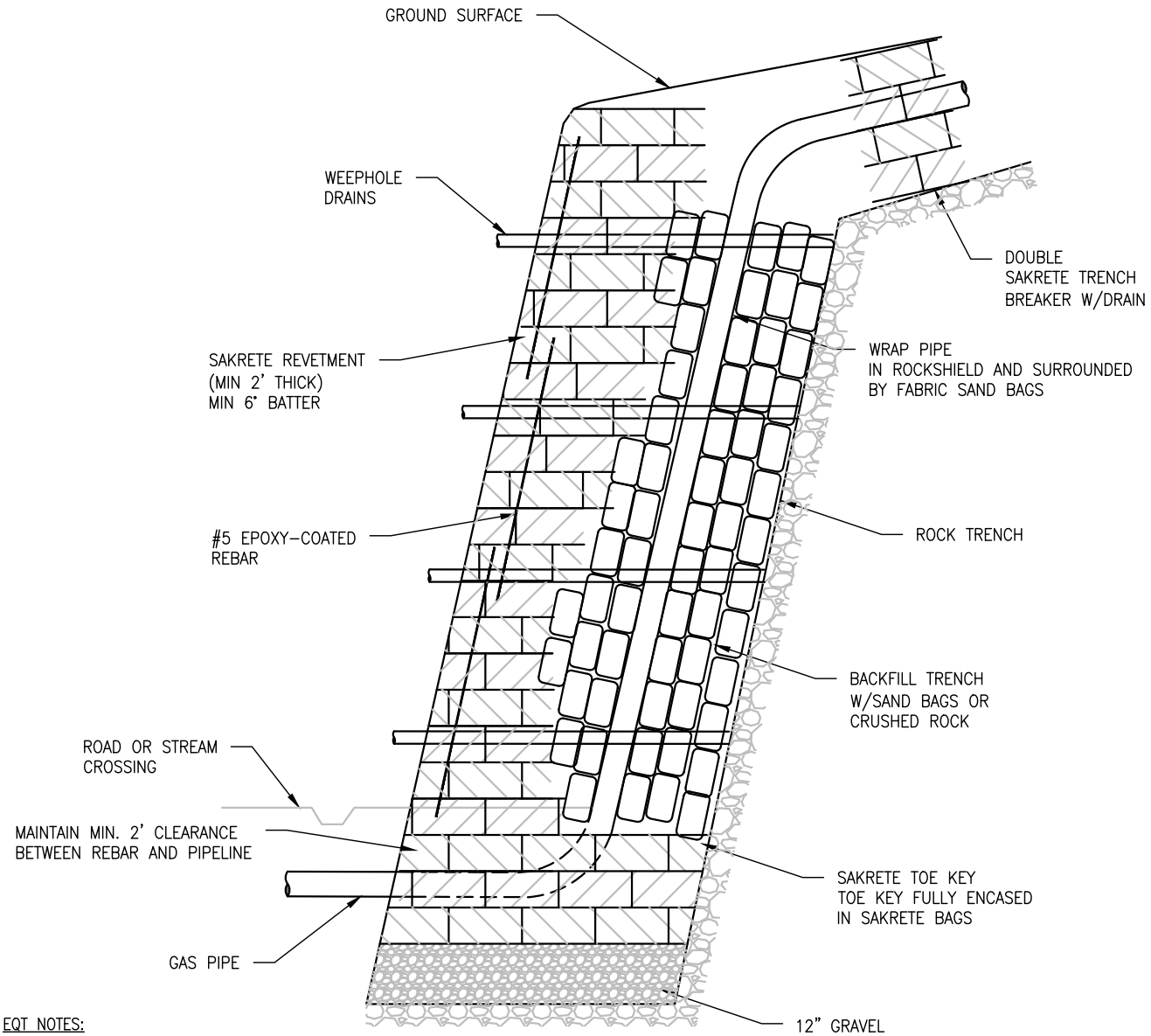

SIDE VIEW
SCALE: NOT TO SCALE

EQT NOTES:

1. SAKRETE BAGS SHOULD EXTEND 4 BAGS DEEP PIPE SHOULD BE COMPLETELY SURROUNDED BY SAND BAGS, OR CRUSHED ROCK (MAX 6").
2. SAKRETE BAGS SHOULD BE STAGGERED IN A MASONRY FASHION. THE FACE OF THE WELL SHALL BE INCLINED 6°–10° FROM VERTICAL.
3. #5 REBAR SHOULD BE DRIVEN THROUGH THE SAKRETE BAGS (SEE DETAIL 1).
4. 2"ø PVC WEEPHOLE DRAINS SHALL BE INSTALLED EVERY 15 FT.

THIS TYPICAL CONSTRUCTION DETAIL IS INTENDED TO PROVIDE GUIDANCE TO THE PIPELINE CONTRACTOR. THE ACTUAL CONSTRUCTION TECHNIQUES MAY DIFFER DEPENDING UPON FIELD CONDITIONS AND OR REGULATORY REQUIREMENTS.

DRAWN OL	DATE 6/29/2016
CHECKED MMF	DATE –
APP'D	DATE
SCALE N.T.S.	SHEET 1 OF 2
JOB NO.	
PROJECT ID: PXXXX	

Mountain Valley PIPELINE

DESIGN ENGINEERING

TYPICAL CONSTRUCTION DETAIL

SLIDE MITIGATION
HIGHWALL REVETMENT
SIDE VIEW

DRAWING NO. MVP–44A

REV. 0

Plotted by: Lee, Joshua I. on: October 11, 2016 - 2:27 PM

File Path: C:\Vault Working\Systems\MVP\H-600\H-600 Bid Package\Drawing Files\Design Files\Mechanical\Construction Typicals\MVP-44A.dwg

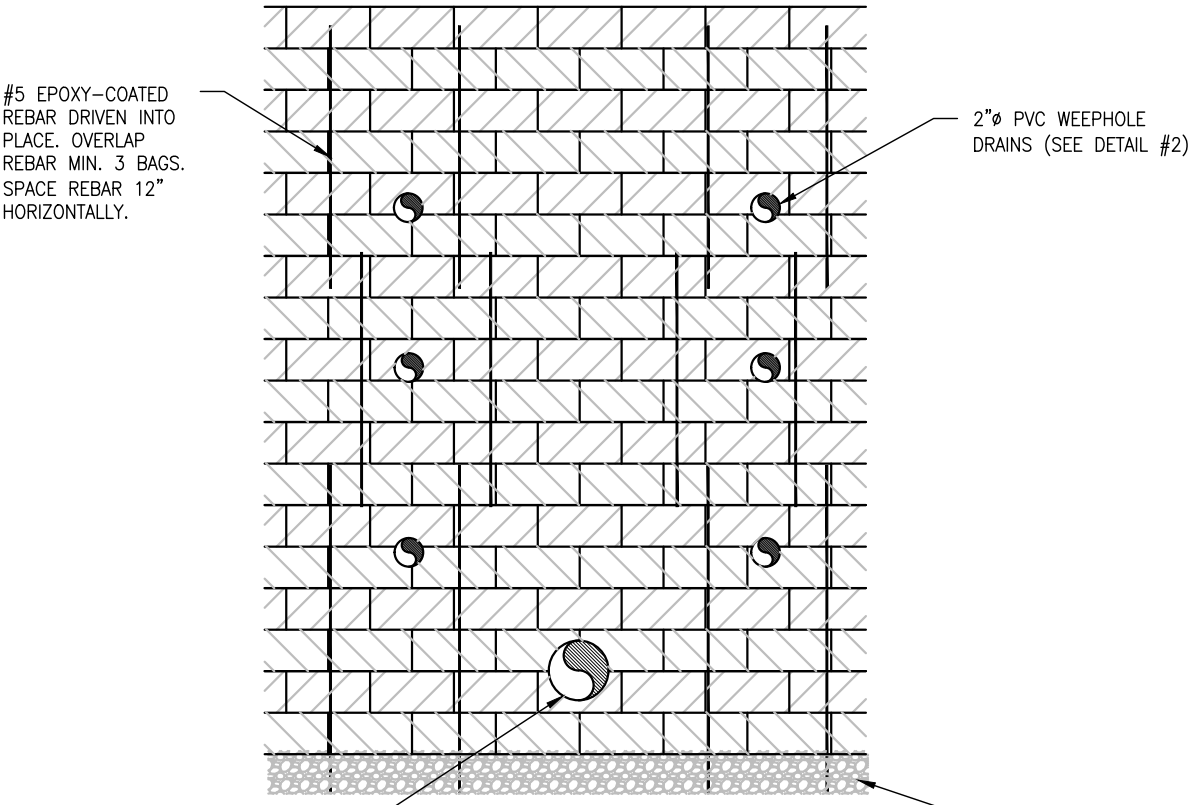

FRONT VIEW
SCALE: NOT TO SCALE

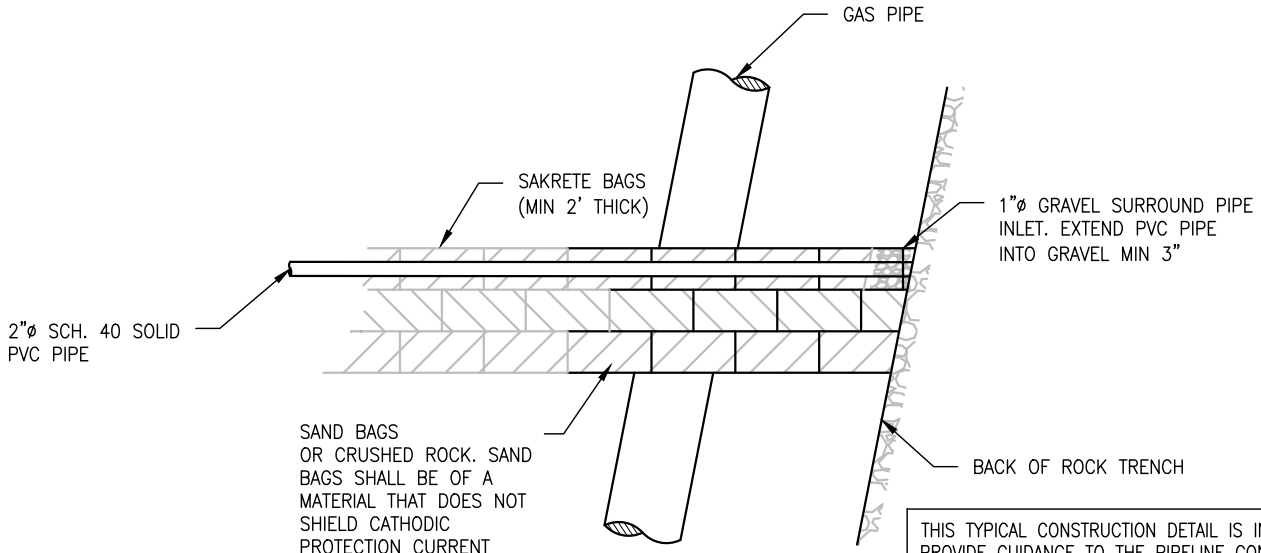

DRAIN DETAIL
SCALE: NOT TO SCALE

THIS TYPICAL CONSTRUCTION DETAIL IS INTENDED TO PROVIDE GUIDANCE TO THE PIPELINE CONTRACTOR. THE ACTUAL CONSTRUCTION TECHNIQUES MAY DIFFER DEPENDING UPON FIELD CONDITIONS AND OR REGULATORY REQUIREMENTS.

DRAWN	OL	DATE	6/29/2016
CHECKED	MMF	DATE	–
APP'D		DATE	
SCALE	N.T.S.	SHEET	2 OF 2
JOB NO.			
PROJECT ID: PXXXX			

Mountain Valley PIPELINE

DESIGN ENGINEERING

TYPICAL CONSTRUCTION DETAIL

SLIDE MITIGATION
HIGHWALL REVETMENT
FRONT VIEW AND DRAIN DETAIL

DRAWING NO.	REV.
MVP–44B	0

Plotted by: Lee, Joshua I. on: October 11, 2016 - 2:27 PM

File Path: C:\Vault Working\Systems\MVP\H-600\H-600 Bid Package\Drawing Files\Design Files\Mechanical\Construction Typicals\MVP-44B.dwg

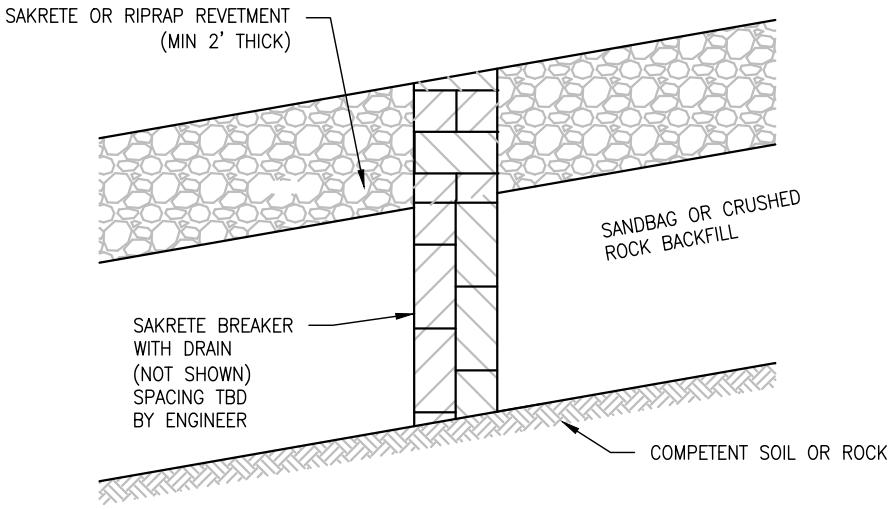

SIDE VIEW
SCALE: NOT TO SCALE

THIS TYPICAL CONSTRUCTION DETAIL IS INTENDED TO PROVIDE GUIDANCE TO THE PIPELINE CONTRACTOR. THE ACTUAL CONSTRUCTION TECHNIQUES MAY DIFFER DEPENDING UPON FIELD CONDITIONS AND OR REGULATORY REQUIREMENTS.

DRAWN	TDD	DATE	2/03/2016
CHECKED	MMF	DATE	2/03/2016
APP'D		DATE	
SCALE	N.T.S.	SHEET	1 OF 1
JOB NO.			
PROJECT ID: PXXXX			

Mountain Valley PIPELINE

DESIGN ENGINEERING

TYPICAL CONSTRUCTION DETAIL

STEEP SLOPE REVETMENT

DRAWING NO.	REV.
MVP-45	0

Plotted by: Lee, Joshua I. on: October 11, 2016 - 2:27 PM

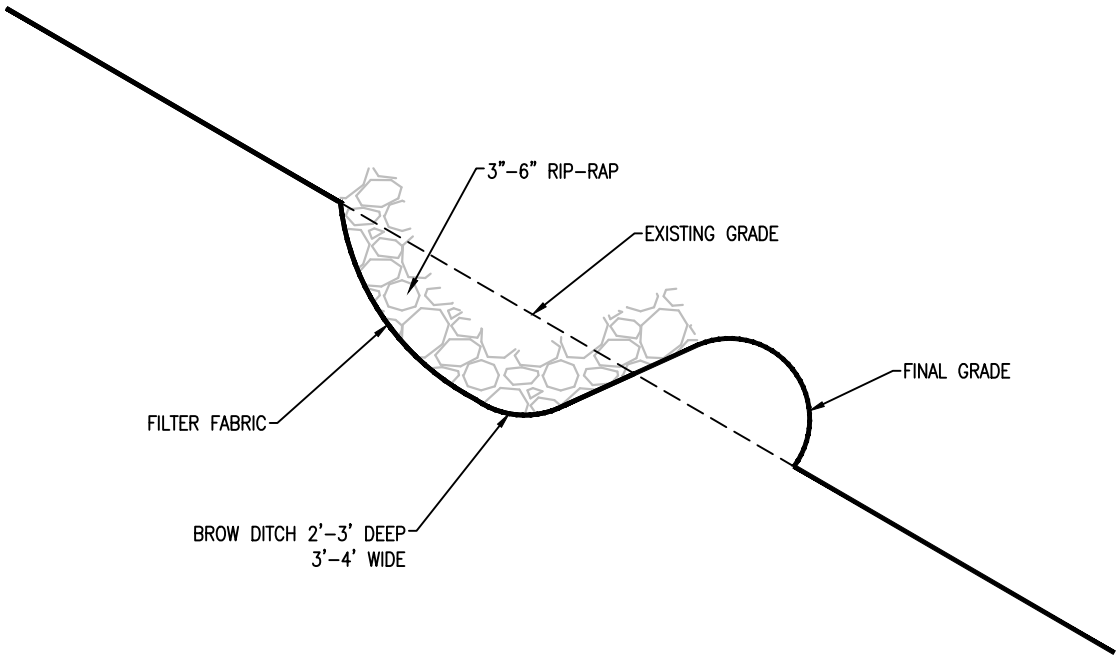

THIS TYPICAL CONSTRUCTION DETAIL IS INTENDED TO PROVIDE GUIDANCE TO THE PIPELINE CONTRACTOR. THE ACTUAL CONSTRUCTION TECHNIQUES MAY DIFFER DEPENDING UPON FIELD CONDITIONS AND OR REGULATORY REQUIREMENTS.

DRAWN	TDD	DATE	7/12/2016
CHECKED	MMF	DATE	7/12/2016
APP'D		DATE	
SCALE	N.T.S.	SHEET	1 OF 1
JOB NO.			
PROJECT ID: PXXXX			

Mountain Valley PIPELINE

DESIGN ENGINEERING

TYPICAL CONSTRUCTION DETAIL

BROW DITCH DETAIL

DRAWING NO.	REV.
MVP–46	0

Plotted by: Lee, Joshua I. on: October 11, 2016 - 2:26 PM

File Path: C:\Vault Working\Systems\MVP\H-600\H-600 Bid Package\Drawing Files\Design Files\Mechanical\Construction Typicals\MVP-46.dwg

Responses to Data Requests

Attachment DR3 General-3

Mountain Valley Pipeline Project

Mountain Valley PIPELINE

FIGURE NUMBER 1
Faults and Fractures

(See Karst Hazards Assessment in Resource Report #6 for more details on karst hydrogeology)

09-30-16

Draper Aden Associates
Engineering • Surveying • Environmental Services

Legend

- MVP October 2016 Proposed Route
- Apparent Fracture Trace
- Faults
- Cave
- Spring
- Sinkhole
- Well (approx)
  Private wells in proximity to MVP activity.
- Karst Areas

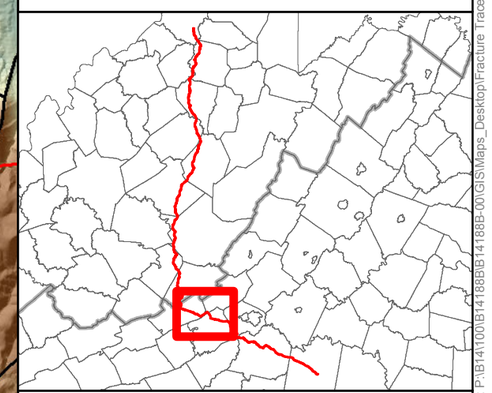

Faults from: Digital Representation of the 1993 Geologic Map of Virginia; 1:500,000
U.S. Geological Survey, 2003. (Virginia Division of Mineral Resources Publication 174)

N

1:150,000

NAD 1983 UTM 17N

0 2 4 Miles

Service Layer Credits:
Terrain model copyright 2007 Commonwealth of Virginia: Roanoke County, Craig County, Montgomery County, Giles County, Pulaski County
USGS 1/9 NED (National Elevation Dataset) (3-meter Digital Elevation Model) created from West Virginia Statewide Addressing and Mapping Board (SAMB) 2003 Digital Terrain Model

Document Path: P:\B14100\B14188B\B14188B-00\GIS\Maps_Desktop\Fracture Trace Regional v2.mxd

Responses to Data Requests

Attachment DR3 General-4

September 29, 2016

Ms. Melissa Fontanese
Mountain Valley Pipeline
625 Liberty Avenue #1700
Pittsburgh, PA 15222

RE: Summary Report of Geotechnical Exploration
Mine Pool Borings
Harrison and Nicholas Counties, West Virginia
Triad Project No. 01-16-0239

Dear Ms. Fontanese:

In accordance with your request, Triad Engineering, Inc. (Triad) has completed geotechnical drilling at the three subject sites in Harrison and Nicholas Counties, West Virginia. Authorization to proceed with this project was provided by submittal of Purchase Order No. 136924 OC on August 25, 2016. The exploration was performed to aid in the assessment of the subsurface conditions within the project areas for the limited purposes of determining the potential for underground mine pools located in the vicinity of the sites, and to confirm there are no conflicts with these pools and future pipeline activities. It is emphasized that subsurface conditions may vary dramatically between borings, and Triad makes no representations as to subsurface conditions other than those encountered at the specific boring locations.

SITE LOCATIONS

The project consisted of test borings at three (3) drill location located near the alignment for the proposed Mountain Valley Pipeline in West Virginia. Boring A was located south of County Route 5, south of the town of Wallace, Harrison County, West Virginia. Boring B was located along access road MVP-MLV-AR-14, north of the town of Nettie, Nicholas County, West Virginia. Boring C was located near access road MVP-NI-170, east of the town of Snow Hill, Nicholas County, West Virginia. Boring Location Plans are located in Appendix A, and show aerial views of these drill locations.

PROJECT OBJECTIVES

In an attempt to identify the possible risk of encountering a mine pool with potential environmental concerns, borings were drilled near the low point in the pipeline alignment in areas where potential mine pool elevations are at the shallowest. The borings were drilled to a depth of 30 feet below the lowest localized ground surface elevation.

DRILLING METHODOLOGY

One (1) test boring was advanced at each drill location. The locations of the borings were selected by Mountain Valley Pipeline, and staked in the field by Triad utilizing handheld GPS devices and Google Earth™ imagery. The elevations provided in the boring logs were estimated from Google Earth™ imagery.

The drilling was accomplished using a CME-55 track-mounted rotary auger drill rig. Borings were advanced through soil and weathered rock overburden with hollow stem augers without sampling. Where auger refusal was encountered, borings were advanced with a downhole hammer driven by air. No sample was obtained while advancing through rock. No water was introduced into the boring while advancing the hole.

No voids or other indications of mining were encountered while advancing the borings. The borings were grouted, prior to leaving the project site.

A staff engineer was present on a full-time basis to direct the drill crew, log the borings, observe groundwater conditions and take groundwater samples.

GROUNDWATER TESTING

In Boring A and Boring B, groundwater was encountered. After completion of the borings, pvc screen with riser was inserted in the boring and the groundwater was allowed to stabilize before obtaining water samples.

Field testing of the water for pH and temperature was performed. Samples of water were tested for Sulfate, Conductivity, Acidity, Alkalinity and total metals and dissolved metals (Aluminum, Iron and Manganese). The results from this testing are provided on the attached table. Actual lab results are also attached.

SUMMARY OF FINDINGS

Based on the results of the water testing, it does not appear that the water encountered in Boring A and Boring B have been impacted by mine pools or are the result of mine pools. Slightly elevated levels in comparison to secondary drinking water samples were encountered for some of the constituents tested however, the slightly elevated levels appear to be naturally occurring not the result of mining. No ground water was encountered in Boring C.

This summary report has been prepared for the exclusive use of Mountain Valley Pipelines, LLC for specific application to the subject mine pool assessment in Harrison and Nicholas Counties, West Virginia. The work has been performed in accordance with reasonable and acceptable geotechnical engineering practices. No other warranty, either expressed or implied, is applicable to this project.

This report should not be used for estimation of construction quantities and/or costs, and contractors should conduct their own investigation of site conditions for these purposes. Please note that Triad is not responsible for any claims, damages or liability associated with any other party's interpretation of the data or re-use of these data or engineering analyses without the express written authorization of Triad

The conclusions contained in this report are based upon our field observations and data obtained from the test borings drilled at the site. The methods used identify subsurface conditions only at the specific locations where samples were obtained and to the depths penetrated. Samples cannot be relied on to accurately reflect the strata variations that often exist between boring locations. The nature and extent of variations may not become evident until construction.

We appreciate the opportunity to assist you on this project and trust this summary report satisfies your needs at this time. Please feel free to contact us if you have questions concerning this report, or if we can provide further assistance.

Sincerely,

TRIAD ENGINEERING, INC.

David W. Hooper

David W. Hooper, P.E.
Geotechnical Manager – Northwestern Region

Attachments: Boring Location Plan
Boring Logs and Sampling Notes
Groundwater Test Result Summary
Groundwater Test Results

Legend
- 990+00
- Drill Location 1
- Feature 1
- Feature 2
- Feature 3
- H600
- PROPOSED MVP ALIGNMENT REV 5.0.0 FROZEN
- PROPOSED MVP H600 ALIGNMENT

990+00

18.7

18.8

BORING A

5 Big Rock Camp Rd

10 Mile Creek

0' 100' 200'

Scale: 1" = 100'

TRIAD ENGINEERING, INC.
1097 CHAPLIN ROAD
MORGANTOWN, WV 26501
PH: 304.296.2562 FAX: 304.296.8739
OFFICE LOCATIONS
MARYLAND - OHIO - PENNSYLVANIA - VIRGINIA - WEST VIRGINIA

CADD FILE: figure A-2.dgn	PROJECT NO: 01-16-0239	CHECKED BY: DWH	SCALE: 1" = 100'
		DRAWN BY: MAD	DATE: 09-28-2016

MVP MINE POOL BORINGS
HARRISON COUNTY, WV

BORING LOCATION 1
(BORING A)

TRIAD ENGINEERING, INC.
www.triadeng.com

FIGURE NUMBER:
A-2.1

PROJECT NO.: 01-16-0239

Legend
- 990+00
- Drill Location 1
- Feature 1
- Feature 2
- Feature 3
- H600
- PROPOSED MVP ALIGNMENT REV 5.0.0 FROZEN
- PROPOSED MVP H600 ALIGNMENT

120.2

MVP-MLV-14

BORING B

6300+00

120.3

ogle earth

Google

0' 100' 200'

Scale: 1" = 100'

TRIAD ENGINEERING, INC.
1097 CHAPLIN ROAD
MORGANTOWN, WV 26501
PH: 304.296.2562 FAX: 304.296.8739
OFFICE LOCATIONS
MARYLAND - OHIO - PENNSYLVANIA - VIRGINIA - WEST VIRGINIA

CADD FILE: figure A-2.dgn	PROJECT NO: 01-16-0239	CHECKED BY: DWH	SCALE: 1" = 100'
DRAWN BY: MAD	DATE: 09-28-2016		

MVP MINE POOL BORINGS
NICOLAS COUNTY, WV

BORING LOCATION 4
(BORING B)

TRIAD ENGINEERING, INC.
www.triadeng.com

FIGURE NUMBER:
A-2.4

PROJECT NO.: 01-16-0239

TRIAD ENGINEERING, INC.
1097 CHAPLIN ROAD
MORGANTOWN, WV 26501
PH: 304.296.2562 FAX: 304.296.8739
OFFICE LOCATIONS
MARYLAND - OHIO - PENNSYLVANIA - VIRGINIA - WEST VIRGINIA

CADD FILE: figure A-2.dgn	PROJECT NO: 01-16-0239	CHECKED BY: DWH	SCALE: 1" = 100'
		DRAWN BY: MAD	DATE: 09-28-2016

MVP MINE POOL BORINGS
NICOLAS COUNTY, WV

BORING LOCATION 5
(BORING C)

TRIAD ENGINEERING, INC.
www.triadeng.com

FIGURE NUMBER:
A-2.5
PROJECT NO.: 01-16-0239

TRIAD ENGINEERING, INC.

MVP Mine Bool Borings

Boring A:

Approximate Surface Elevation (via Google Earth imagery) = 1018'
Date Drilled: 9/14/16 Inspector: Matt Idleman
Driller: Kevin Walton, Triad Engineering, CME 55 Track Mounted
Tools: 4 ¼ HAS. 3" Down Hole Hammer
Well Casing for Water Sampling: 2" PVC (installed and removed)
Boring grouted after water sampling

Boring Depth from Ground Surface	Material Description and Notes
0.0 – 7.0 ft.	Brown – red silty CLAY, little rock fragments, moist
7.0 – 10.0 ft.	Gray BEDROCK (Auger Refusal at 10.0 feet)
10.0 – 40.0 ft.	Downhole Hammer equipment was utilized to penetrate bedrock in 5-foot runs. Rock was gray and brown with varying hardnesses. Hammer debris was dry, with water in bottom of boring between runs.
Bottom of boring = 40.0 feet (Approximate elevation = 978')	

- Groundwater Information:

Time Relative to Drilling Operations	Approximate Depth of Groundwater Below Ground Surface (ft.)
During Drilling	10.0
Immediately after Completion	33.4
30 Minutes after Completion	23.1
60 Minutes after Completion*	13.8
90 Minutes after Completion	11.3

*Water Samples taken 60 minutes after completion of drilling

TRIAD ENGINEERING, INC.

MVP Mine Bool Borings

Boring B:

Approximate Surface Elevation (via Google Earth imagery) = 2050'
Date Drilled: 9/20/16 Inspector: Matt Idleman
Driller: Kevin Walton, Triad Engineering, CME 55 Track Mounted
Tools: 4 ¼ HAS. 3" Down Hole Hammer
Well Casing for Water Sampling: 2" PVC (installed and removed)
Boring grouted after water sampling

Boring Depth from Ground Surface	Material Description and Notes
0.0 – 2.0 ft.	FILL: Brown gravelly CLAY, some sand, slightly moist
2.0 – 4.5 ft.	ALLUVIUM: Brown sandy CLAY, little coarse rock fragments, slightly moist
4.5 – 5.0 ft.	APPARENT BOULDER (First Auger Refusal at 5.0 feet)
5.0 – 14.0 ft.	Downhole Hammer equipment was utilized to penetrate apparent boulders and soft material to a depth of 14.0 feet. Hammer debris was wet. (Switched back to soil augers at 14.0 feet)
14.0 – 18.5 ft.	ALLUVIUM: Brown gravelly clay, some sand, slightly moist to moist
18.5 – 19.0 ft.	APPARENT BOULDERS (Second Auger Refusal at 19.0 feet)
19.0 – 39.0 ft.	Downhole Hammer Equipment was utilized to penetrate boulders and soft material to a depth of 39.0 feet. Hammer debris was wet.
Bottom of boring = 39.0 feet (Approximate elevation = 2011')	

- Groundwater Information:

Time Relative to Drilling Operations	Approximate Depth of Groundwater Below Ground Surface (ft.)
During Drilling	9.0
Immediately after Completion	13.7
30 Minutes after Completion	7.1
60 Minutes after Completion	6.5

*Water Samples taken 45 minutes after completion of drilling

TRIAD ENGINEERING, INC.

MVP Mine Bool Borings

Boring C:

Approximate Surface Elevation (via Google Earth imagery) = 2636'
Date Drilled: 9/164/16 Inspector: Matt Idleman
Driller: Kevin Walton, Triad Engineering, CME 55 Track Mounted
Tools: 4 ¼ HAS. 3" Down Hole Hammer
Boring grouted after water sampling

Boring Depth from Ground Surface	Material Description and Notes
0.0 – 5.0 ft.	Light brown silty CLAY, trace rock fragments, dry to slightly moist
5.0 – 6.0 ft.	Tan SILT, little rock fragments, dry
6.0 – 10.0 ft.	Tan BEDROCK (Auger Refusal at 10.0 feet)
10.0 – 111.0 ft.	Downhole Hammer equipment was utilized to penetrate bedrock in 5-foot runs. Rock was brown and dark gray with varying hardnesses. Hammer debris was dry.
Bottom of boring = 111.0 feet (Approximate elevation = 2525')	

- Groundwater information:
  - Boring was dry during, upon completion, and 30 minutes after completion.

Table 1. Water Quality Data

Analyte	Field Parameters		Sample ID	
			Boring A	Boring B
	Temp. °C		23	20
	pH		7.08	5.27
	Units	SDWS		
Aluminum	mg/L	**0.05 to 0.2**	0.032	**0.209**
Iron	mg/L	0.3	0.088	0.285
Manganese	mg/L	**0.05**	**0.699**	**0.053**
Acidity, Total	mg/L	NA	8.8	19.1
Alkalinity, Total	mg/L	NA	114	4.3
Conductivity	umho/cm	NA	343	55.3
Sulfate	mg/L	250	15.8	5.65

Notes:
SDWS: Secondary Drinking Water Standard as promulgated by the Federal Safe Drinking Water Act
NA - Not Available

REI Consultants, Inc.
PO Box 286
Beaver, WV 25813
TEL: (304) 255-2500
Website: www.reiclabs.com

Improving the environment, one client at a time...

3029-C Peters Creek Road
Roanoke, VA 24019
TEL: 540.777.1276

1557 Commerce Road, Suite 201
Verona, VA 24482
TEL: 540.248.0183

16 Commerce Drive
Westover, WV 26501
TEL: 304.241.5861

Friday, September 30, 2016

Matt Idleman
TRIAD ENGINEERING INC-MORGANTOWN
1097 Chaplin Road
MORGANTOWN, WV 26505

TEL: (304) 296-2562
FAX: (304) 296-8739

RE: 01-16-0239

Work Order #: 16092773

Dear Matt Idleman:

This is an amended or revised report for the subject Work Order. This report contains supplemental information or results revisions and should be used in place of any prior report for the Work Order. The specific amendments are listed in the narrative of this report.

Sincerely,

Jimmy Suttle

Project Manager

REI Consultants, Inc. - Case Narrative

WO#: 16092773

Date Reported: 9/30/2016

Client: TRIAD ENGINEERING INC-MORGANTOWN

Project: 01-16-0239

The analytical results presented in this report were produced using documented laboratory SOPs that incorporate appropriate quality control procedures as described in the applicable methods. Verification of required sample preservation (as required) is recorded on associated laboratory logs. Any deviation from compliance or method modification is identified within the body of this report by a qualifier footnote which is defined at the bottom of this page.

All sample results for solid samples are reported on an "as-received" wet weight basis unless otherwise noted.

Results reported for sums of individual parameters, such as TTHM and HAA5, may vary slightly from the sum of the individual parameter results, due to rounding of individual results, as required by EPA.

The test results in this report meet all NELAP and/or VELAP requirements for parameters clearly designated as PA, VA, PA/VA, or VELAP in the column labeled NELAP.

Please note if the sample collection time is not provided on the Chain of Custody, the default recording will be 0:00:00. This may cause some tests to be apparently analyzed out of hold.

All tests performed by REIC Service Centers are designated by an annotation on the test code. All other tests were performed by REIC's Main Laboratory in Beaver, WV.

Amendments: Changed sample Id B-1 to Boring A and B-4 to Boring B.

This report may not be reproduced, except in full, without the written approval of REIC.

DEFINITIONS:
MCL: Maximum Contaminant Level
MDL: Method Detection Limit; The lowest concentration of analyte that can be detected by the method in the applicable matrix.
Mg/Kg or mg/L: Units of part per million (PPM) - milligram per Kilogram (weight/weight) or milligram per Liter (weight/volume).
NA: Not Applicable
ND: Not Detected at the PQL or MDL
PQL: Practical Quantitation Limit; The lowest verified limit to which data is quantified without qualifications. Analyte concentrations below PQL are reported either as ND or as a number with a "J" qualifier.
Qual: Qualifier that applies to the analyte reported.
TIC: Tentatively Identified Compound, Estimated Concentration denoted by "J" qualifier.
Ug/Kg or ug/L: Units of part per billion (PPB) - microgram per kilogram (weight/weight) or microgram per liter (weight/volume).

QUALIFIERS:
X: Reported value exceeds required MCL
B: Analyte detected in the associated Method Blank at a concentration > 1/2 the PQL
E: The sample result is within the method accepted Linear Dynamic Range determined by the lab for this analysis. However, it may be considered estimated when applying the TNI (The NELAC Institute) standard.
H: Holding time for preparation or analysis has been exceeded.
J: Analyte concentration is reported, and is less than the PQL and greater than or equal to the MDL. The result reported is an estimate.
S: % REC (% recovery) exceeds control limits

CERTIFICATIONS:
Beaver, WV: WVDHHR 00412CM, WVDEP 060, VADCLS 00281, KYDEP 90039, NCDWQ 466, PADEP 68-00839, VADCLS(VELAP) 460148
Bioassay (Beaver, WV): WVDEP 060, VADCLS(VELAP) 460148, PADEP 68-00839
Roanoke, VA: VADCLS(VELAP) 460150
Verona, VA: VADCLS(VELAP) 460151
Morgantown, WV: WVDHHR 003112M, WVDEP 387

REI Consultants, Inc. - Analytical Report

WO#: 16092773

Date Reported: 9/30/2016

Client:	TRIAD ENGINEERING INC-MORGANTOWN	**Collection Date:**	9/14/2016 2:30:00 PM
Project:	01-16-0239	**Date Received:**	9/26/2016
Lab ID:	16092773-01A	**Matrix:**	Liquid
Client Sample ID:	BORING A	**Site ID:**	

Analysis	Result	MDL	PQL	MCL	Qual	Units	Date Analyzed	NELAP
METALS BY ICP			**Method: EPA 200.7 Rev. 4.4 (1994)**				**Analyst: JD**	
Aluminum	47.5	0.060	1.00	NA		mg/L	9/28/2016 11:01 AM	PA/VA
Iron	102	0.100	1.00	NA		mg/L	9/28/2016 11:01 AM	PA/VA
Manganese	2.64	0.002	0.100	NA		mg/L	9/27/2016 8:56 PM	PA/VA

REI Consultants, Inc. - Analytical Report

WO#: 16092773

Date Reported: 9/30/2016

Client:	TRIAD ENGINEERING INC-MORGANTOWN	**Collection Date:**	9/14/2016 2:30:00 PM
Project:	01-16-0239	**Date Received:**	9/26/2016
Lab ID:	16092773-01B	**Matrix:**	Liquid
Client Sample ID:	BORING A	**Site ID:**	

Analysis	Result	MDL	PQL	MCL	Qual	Units	Date Analyzed	NELAP
DISSOLVED METALS BY ICP			**Method: EPA 200.7 Rev. 4.4 (1994)**				**Analyst: JD**	
Aluminum	0.032	0.006	0.100	NA	J	mg/L	9/28/2016 11:10 AM	PA/VA
Iron	0.088	0.010	0.100	NA	J	mg/L	9/28/2016 11:10 AM	PA/VA
Manganese	0.699	0.002	0.100	NA		mg/L	9/27/2016 9:11 PM	PA/VA

REI Consultants, Inc. - Analytical Report

WO#: 16092773

Date Reported: 9/30/2016

Client:	TRIAD ENGINEERING INC-MORGANTOWN	**Collection Date:**	9/20/2016 12:50:00 PM
Project:	01-16-0239	**Date Received:**	9/26/2016
Lab ID:	16092773-02A	**Matrix:**	Liquid
Client Sample ID:	BORING B	**Site ID:**	

Analysis	Result	MDL	PQL	MCL	Qual	Units	Date Analyzed	NELAP
METALS BY ICP			**Method: EPA 200.7 Rev. 4.4 (1994)**				**Analyst: JD**	
Aluminum	1,230	0.600	10.0	NA		mg/L	9/27/2016 9:18 PM	PA/VA
Iron	2,140	1.00	10.0	NA		mg/L	9/27/2016 9:18 PM	PA/VA
Manganese	25.9	0.020	1.00	NA		mg/L	9/27/2016 9:14 PM	PA/VA

REI Consultants, Inc. - Analytical Report

WO#: 16092773

Date Reported: 9/30/2016

Client:	TRIAD ENGINEERING INC-MORGANTOWN	**Collection Date:**	9/20/2016 12:50:00 PM
Project:	01-16-0239	**Date Received:**	9/26/2016
Lab ID:	16092773-02B	**Matrix:**	Liquid
Client Sample ID:	BORING B	**Site ID:**	

Analysis	Result	MDL	PQL	MCL	Qual	Units	Date Analyzed	NELAP
DISSOLVED METALS BY ICP			**Method: EPA 200.7 Rev. 4.4 (1994)**				**Analyst: JD**	
Aluminum	0.209	0.006	0.100	NA		mg/L	9/27/2016 9:21 PM	PA/VA
Iron	0.285	0.010	0.100	NA		mg/L	9/27/2016 9:21 PM	PA/VA
Manganese	0.053	0.002	0.100	NA	J	mg/L	9/27/2016 9:21 PM	PA/VA

REIC

Improving the environment, one client at a time...

REI Consultants, Inc.
PO Box 286
Beaver, WV 25813
TEL: (304) 255-2500
Website: www.reiclabs.com

3029-C Peters Creek Road
Roanoke, VA 24019
TEL: 540.777.1276

1557 Commerce Road, Suite 201
Verona, VA 24482
TEL: 540.248.0183

16 Commerce Drive
Westover, WV 26501
TEL: 304.241.5861

Friday, September 30, 2016

Matt Idleman
TRIAD ENGINEERING INC-MORGANTOWN
1097 Chaplin Road
MORGANTOWN, WV 26505

TEL: (304) 296-2562
FAX: (304) 296-8739

RE: 01-16-0239

Work Order #: 16092921

Dear Matt Idleman:

This is an amended or revised report for the subject Work Order. This report contains supplemental information or results revisions and should be used in place of any prior report for the Work Order. The specific amendments are listed in the narrative of this report.

Sincerely,

Jimmy Suttle

Project Manager

REI Consultants, Inc. - Case Narrative

WO#: 16092921

Date Reported: 9/30/2016

Client: TRIAD ENGINEERING INC-MORGANTOWN

Project: 01-16-0239

The analytical results presented in this report were produced using documented laboratory SOPs that incorporate appropriate quality control procedures as described in the applicable methods. Verification of required sample preservation (as required) is recorded on associated laboratory logs. Any deviation from compliance or method modification is identified within the body of this report by a qualifier footnote which is defined at the bottom of this page.

All sample results for solid samples are reported on an "as-received" wet weight basis unless otherwise noted.

Results reported for sums of individual parameters, such as TTHM and HAA5, may vary slightly from the sum of the individual parameter results, due to rounding of individual results, as required by EPA.

The test results in this report meet all NELAP and/or VELAP requirements for parameters clearly designated as PA, VA, PA/VA, or VELAP in the column labeled NELAP.

Please note if the sample collection time is not provided on the Chain of Custody, the default recording will be 0:00:00. This may cause some tests to be apparently analyzed out of hold.

All tests performed by REIC Service Centers are designated by an annotation on the test code. All other tests were performed by REIC's Main Laboratory in Beaver, WV.

Amendments: Changed sample Id B-1 to Boring A and B-4 to Boring B.

This report may not be reproduced, except in full, without the written approval of REIC.

DEFINITIONS:
MCL: Maximum Contaminant Level
MDL: Method Detection Limit; The lowest concentration of analyte that can be detected by the method in the applicable matrix.
Mg/Kg or mg/L: Units of part per million (PPM) - milligram per Kilogram (weight/weight) or milligram per Liter (weight/volume).
NA: Not Applicable
ND: Not Detected at the PQL or MDL
PQL: Practical Quantitation Limit; The lowest verified limit to which data is quantified without qualifications. Analyte concentrations below PQL are reported either as ND or as a number with a "J" qualifier.
Qual: Qualifier that applies to the analyte reported.
TIC: Tentatively Identified Compound, Estimated Concentration denoted by "J" qualifier.
Ug/Kg or ug/L: Units of part per billion (PPB) - microgram per kilogram (weight/weight) or microgram per liter (weight/volume).

QUALIFIERS:
X: Reported value exceeds required MCL
B: Analyte detected in the associated Method Blank at a concentration > 1/2 the PQL
E: The sample result is within the method accepted Linear Dynamic Range determined by the lab for this analysis. However, it may be considered estimated when applying the TNI (The NELAC Institute) standard.
H: Holding time for preparation or analysis has been exceeded.
J: Analyte concentration is reported, and is less than the PQL and greater than or equal to the MDL. The result reported is an estimate.
S: % REC (% recovery) exceeds control limits

CERTIFICATIONS:
Beaver, WV: WVDHHR 00412CM, WVDEP 060, VADCLS 00281, KYDEP 90039, NCDWQ 466, PADEP 68-00839, VADCLS(VELAP) 460148
Bioassay (Beaver, WV): WVDEP 060, VADCLS(VELAP) 460148, PADEP 68-00839
Roanoke, VA: VADCLS(VELAP) 460150
Verona, VA: VADCLS(VELAP) 460151
Morgantown, WV: WVDHHR 003112M, WVDEP 387

REI Consultants, Inc. - Analytical Report

WO#: 16092921

Date Reported: 9/30/2016

Client:	TRIAD ENGINEERING INC-MORGANTOWN	**Collection Date:**	9/14/2016 2:30:00 PM
Project:	01-16-0239	**Date Received:**	9/27/2016
Lab ID:	16092921-01A	**Matrix:**	Waste Water
Client Sample ID:	BORING A	**Site ID:**	

Analysis	Result	MDL	PQL	MCL	Qual	Units	Date Analyzed	NELAP
ANIONS by ION CHROMATOGRAPHY			**Method: EPA 300.0, Rev.2.1 (1993)**				**Analyst: CF**	
Sulfate	15.8	1.00	5.00	NA		mg/L	9/28/2016 9:13 PM	PA/VA
CONDUCTIVITY			**Method: SM2510 B-1997**				**Analyst: KY**	
Specific Conductivity	343	NA	NA	NA		µmho/cm	9/28/2016 2:00 PM	PA/VA
ACIDITY			**Method: SM2310 B-1997**				**Analyst: VS**	
Acidity, Total	8.8	1.0	10	NA	J	mg/L	9/28/2016 12:24 PM	PA/VA
ALKALINITY			**Method: SM2320 B-1997**				**Analyst: VS**	
Alkalinity, Total (As CaCO3)	114	1.0	20.0	NA		mg/L	9/28/2016 12:24 PM	PA/VA

REI Consultants, Inc. - Analytical Report

WO#: 16092921

Date Reported: 9/30/2016

Client:	TRIAD ENGINEERING INC-MORGANTOWN	**Collection Date:**	9/20/2016 12:50:00 PM
Project:	01-16-0239	**Date Received:**	9/27/2016
Lab ID:	16092921-02A	**Matrix:**	Waste Water
Client Sample ID:	BORING B	**Site ID:**	

Analysis	Result	MDL	PQL	MCL	Qual	Units	Date Analyzed	NELAP
ANIONS by ION CHROMATOGRAPHY			**Method: EPA 300.0, Rev.2.1 (1993)**				**Analyst: CF**	
Sulfate	5.65	1.00	5.00	NA		mg/L	9/28/2016 2:35 PM	PA/VA
CONDUCTIVITY			**Method: SM2510 B-1997**				**Analyst: KY**	
Specific Conductivity	55.3	NA	NA	NA		µmho/cm	9/28/2016 2:00 PM	PA/VA
ACIDITY			**Method: SM2310 B-1997**				**Analyst: VS**	
Acidity, Total	19.1	1.0	10	NA		mg/L	9/28/2016 12:24 PM	PA/VA
ALKALINITY			**Method: SM2320 B-1997**				**Analyst: VS**	
Alkalinity, Total (As CaCO3)	4.3	1.0	20.0	NA	J	mg/L	9/28/2016 12:24 PM	PA/VA

Responses to Data Requests

Attachment DR3 Water Resources-10a

Geotechnical Data Report
Pigg River Pipeline Crossing
Pittsylvania County, Virginia
S&ME Project No. 1358-15-086B

Prepared for:
RK&K
125 Floyd Smith Drive, Suite 140
Charlotte, North Carolina 28262

Prepared by:
S&ME, Inc.
8646 W Market Street, Suite 105
Greensboro, North Carolina 27409

October 10, 2016

October 10, 2016

RK&K
125 Floyd Smith Drive, Suite 140
Charlotte, North Carolina 28262

Attention: Mr. Wayne Noonoo, PE

Reference: **Geotechnical HDD Data Report**
Pigg River Pipeline Crossing
Pittsylvania County, Virginia
S&ME Project No. 1358-15-086B_revised

Dear Mr. Noonoo:

S&ME, Inc. (S&ME) has completed the field exploration and laboratory testing for the above referenced project. The purpose was to explore and characterize subsurface conditions for use in design and construction of a pipeline across the Pigg River in Pittsylvania County, Virginia. Our work was performed in general accordance with S&ME Proposal No. 15-1500447, REV 1 dated November 5, 2015 and the terms and conditions of the RK&K Subcontract Agreement for RK&K Project 1215-040 formally authorized on November 11, 2015. This report was revised October 10, 2016 to remove mile post designations from boring names.

S&ME appreciates the opportunity to provide geotechnical exploration and testing services for this project. If you have questions or need additional information in regard to this report, please call us at (336) 288-7180.

Sincerely,
S&ME, Inc.

Matt Moler, P.E.
Senior Engineer

MM/SH/wj

COMMONWEALTH OF VIRGINIA
SCOTT E. HANCOCK
Lic. No. 16447
PROFESSIONAL ENGINEER
Oct 11 2016 8:43 AM

Scott Hancock, P.E.
Technical Principal/Vice President
Project Manager

Table of Contents

1.0 Project Information 1

2.0 Geology 1

3.0 Exploration Procedures 2

3.1 Field 2

3.2 Laboratory 3

4.0 HDD Subsurface Conditions 3

5.0 Qualifications 5

Appendices

Appendix I – Figures

Appendix II – Soil Test Borings

Appendix III – Laboratory

1.0 Project Information

Project information has been obtained from e-mail correspondence between Bill Snyder and Wayne Noonoo with RK&K and Scott Hancock with S&ME, and various Google Earth .kmz files.

A nominally 300 mile long, 42-inch diameter pipeline is planned from Wetzel, West Virginia to Pittsylvania County, Virginia. Numerous roads, interstates, waterways, apparent wetlands, and railroads will be crossed by the pipeline. S&ME was engaged to explore subsurface conditions for selected crossings, including the Pigg River in Pittsylvania County, Virginia. This Geotechnical Data Report summarizes the exploration, laboratory testing, site geology, and anticipated subsurface conditions for the proposed crossing of the Pigg River.

2.0 Geology

The Geologic Map of Virginia (1993) indicates that the site is in the Western Piedmont (Fork Mountain Formation) of the Piedmont Physiographic Province. The primary rock type is mica schist with less common gneiss and quartize. The soils at the subject site have formed by in-place weathering of parent bedrock, and are referred to as residuum or residual soils. The residuum is typically fine-grained and has a higher clay content near the surface because of more advanced weathering. The soils generally become less clayey and more sandy with depth because of less advanced weathering.

The thickness of soil overlying bedrock is variable and the boundary between soil and rock is not sharply defined. A transitional zone between soil and rock termed "partially weathered rock" is normally found overlying the bedrock. Partially weathered rock (PWR) is defined for engineering purposes as residual material that can be penetrated by the drill rig augers used for the exploration and has standard penetration test blow counts in excess of 50 blows for six inches or less of sampler penetration. Weathering is facilitated by fractures, joints and by the presence of less resistant rock types. Consequently, the profile of the partially weathered rock and hard rock varies, even over short horizontal distances.

Groundwater in the Piedmont is recharged by infiltration of precipitation through the ground surface to the water table. The permeability of Piedmont materials typically increases with depth, resulting in storage of water in an unconfined aquifer. Groundwater is primarily stored in void spaces in residual soils with secondary storage in fractures within the bedrock. The groundwater flow direction generally trends from topographic high re-charge areas toward topographic low areas where groundwater discharges to drainage features. Due to the high clay content and corresponding low permeability of Piedmont surface soils, transient, shallow perched areas of groundwater sometime form after periods of heavy rainfall, particularly if existing fill is present.

Based on our experience with HDD and the area geology, we have the following comments relative to HDD natural geologic hazards associated with the subject site:

HDD GEOLOGIC HAZARD	COMMENTS
Cohesionless sand, gravel, cobbles, or boulders with little to no fines.	Possible within alluvial floodplain; not encountered by exploration.
Horizontal zones of gravel, cobbles, or boulders in soil matrix.	Possible within alluvial floodplain; not encountered by exploration.
Near vertical zones of gravel, cobbles, or boulders in soil matrix.	Inconsistent with site geology.
Voids or preferential seepage paths potentially resulting in loss of drilling fluid return.	Inconsistent with site geology.
Very loose sand or very soft silt/clay.	Inconsistent with site geology.
Peat, organic soil.	Inconsistent with site geology.
Material with sufficient potential swell upon exposure to water to reduce borehole diameter.	Inconsistent with site geology.
Continuous strata of hard material requiring rock drilling techniques to penetrate.	Partially weathered rock and rock were encountered in the borings. Rock required rock coring to penetrate.
Artesian groundwater conditions.	Inconsistent with site geology.

3.0 Exploration Procedures

3.1 Field

Three soil test borings (labeled Pigg River B-1, Pigg River B-2, and Pigg River B-3) were conducted at the locations indicated on Figure 1 (Boring Location Plan – Appendix I). Boring locations were selected by RK&K and located in the field by S&ME personnel using sub-meter GPS equipment. Boring locations were offset from requested locations due to large trees, local topography, apparent wetlands, or other access considerations. The boring elevations were interpolated by RK&K from topographic maps and provided to S&ME for inclusion on boring logs and sections. Boring coordinates and elevations on the boring logs and profile in Appendix I and II should be considered approximate.

Boring Pigg River B-1 was in a corn field and access caused some crop damage. Access to borings Pigg River B-2, and Pigg River B-3 required clearing of trees and brush. Clearing was performed with a "hydro axe" which chipped the vegetation inplace without causing ground disturbance.

The borings were conducted using a D-50 track mounted drill rig. Hollow stem drilling procedures were used to advance the borings to auger refusal depths. Standard Penetration Tests (SPT) were performed in the borings at 2.5-foot intervals in the top 10 feet, then at 5-foot intervals thereafter, in general accordance with ASTM D 1586 to provide an index for estimating strength parameters and relative

consistency of subsurface soils. If refusal was encountered above the assigned boring depth, casing was set to the refusal depth and rock coring performed using an NQ size conventional core barrel.

Water levels were measured at boring termination and after 24 hours or more after drilling activities. Upon completion of groundwater level measurements, the boreholes were grouted to within 5 feet of the ground surface with cement-bentonite grout through a tremie pipe discharging at the bottom of the borehole. The top 5 feet of the boreholes were backfilled with compacted soil cuttings.

3.2 Laboratory

Samples were returned to our laboratory where a geotechnical staff professional visually examined each soil sample to assess the distribution of grain sizes, plasticity, organic content, moisture condition, color, presence of lenses and seams, and apparent geological origin. A staff geologist visually examined each rock core sample to determine rock type, color, hardness, recovery, Rock Quality Designation (RQD), weathering, and documentation of fractures. The results of the classifications are presented on the individual Boring Logs included in Appendix II. The contact lines between materials represent approximate boundaries between the soil and rock types. The actual contacts may vary in both the horizontal and vertical directions.

Classification tests were performed on selected soil samples obtained during the field exploration. Laboratory testing included:

- Grain Size Distribution (#200 wash) (ASTM D 422)
- Plasticity (ASTM D 4318)
- Rock Unconfined Compressive Strength (ASTM D 7012)

The Moh's Hardness was determined during rock core classification by comparison of rock core to various known standards. The Moh's Hardness determined are presented on the boring logs in Appendix II. Laboratory test results are presented in Appendix III.

4.0 HDD Subsurface Conditions

Subsurface conditions at the HDD crossing were characterized based on subsurface conditions encountered and geologic setting. Soils with similar HDD drilling characteristics were grouped into strata (as shown in the table) based on visual soil classification, laboratory classification tests, consistencies inferred from standard penetration resistance values, and geologic origin. Material properties were estimated from correlations to material types, laboratory tests, and field tests. The Strata contacts shown on the Generalized Subsurface Profile in Appendix I may vary between the borings and should be considered approximate. Material properties are provided in tables based on correlations with subsurface conditions encountered. More detailed information is presented in Appendix II.

STRATA	DESCRIPTION	PERCENT OF MATERIAL			USCS	SPT (blows/ft)
		GRAVEL	SAND	SILT/CLAY		
I	ALLUVIUM: Loose silty and clayey SAND	< 2%	65% to 90%	10% to 35%	SC, SM	4 to 10
II	RESIDUAL SOIL: Very stiff to hard sandy SILT and medium dense silty SAND	< 5% to 10%	35% to 80%	15% to 65%	SM, ML	12 to 50
III	PARTIALLY WEATHERED ROCK: sampled as silty SAND	< 2%	80% to 85%	15% to 20%	SM	50/2" to 50/6"
IV	ROCK: Mica Schist	-	-	-	-	-

Notes:

1. USCS – Unified Soil Classification System, visual classification.
2. SPT – Standard Penetration Test "N" value. Tests performed with an autohammer.
3. The range of Percentage of Materials is an estimate. See Grain Size Test Summary and attached laboratory tests for specific test information.
4. The information presented above is a generalization of predominant subsurface conditions encountered. The material descriptions, percentages of materials, USCS, and SPT values presented are estimated based on visual classification, laboratory testing, field testing, and experience.

BORING		GROUNDWATER MEASUREMENTS			AUGER REFUSAL	
Location	Surface Elevation (ft)	Time of Boring Depth (ft)	24-hour or more Depth (ft)	Stabilized Measurement Elevation (ft)	Depth (ft)	Elevation (ft)
Pigg River B-1	756	63	52	704	Not encountered to 80 ft	-
Pigg River B-2	658	12	7.2	650.8	16.5	641.5
Pigg River B-3	779	42	25.4	753.6	91	688

The groundwater surface is typically a muted reflection of the surface topography. The groundwater elevation is typically higher in topographically higher areas and slopes toward and discharges into drainage features such as the Pigg River and its tributaries. Groundwater levels fluctuate with seasonal and climatic changes.

Based on the data obtained during our field and laboratory exploration, we recommend the following parameters for use in design of the HDD program.

Strata	Friction Angle (degrees)	Cohesion (psf)	Unit Weight (pcf)		Shear Modulus (ksf)	Unconfined Strength (psi)	Moh's Hardness
			Total	Submerged			
I	25	0	120	58	250	--	--
II	32	0	120	58	500	--	--
III	45	0	130	68	--	--	--
IV	--	--	170 to 190	108 to 128	--	3,000 to 10,000	1 to 3 typical 2 to 4 with depth, 7 to 8 isolated layers

5.0 Qualifications

This report has been prepared in accordance with generally accepted geotechnical engineering practice for specific application to this project. The conclusions contained in this report were based on the applicable standards of the engineering profession at the time this report was prepared. No other warranty, express or implied, is made.

The nature and extent of variations between borings may not become evident until construction. If variations appear evident, then it will be necessary to reevaluate the applicability of the information obtained with this exploration and laboratory testing program. Environmental services were beyond the scope of this report.

Appendices

Appendix I – Figures

Boring Location Plan – Figure 1
Generalized Subsurface Profile – Figure 2

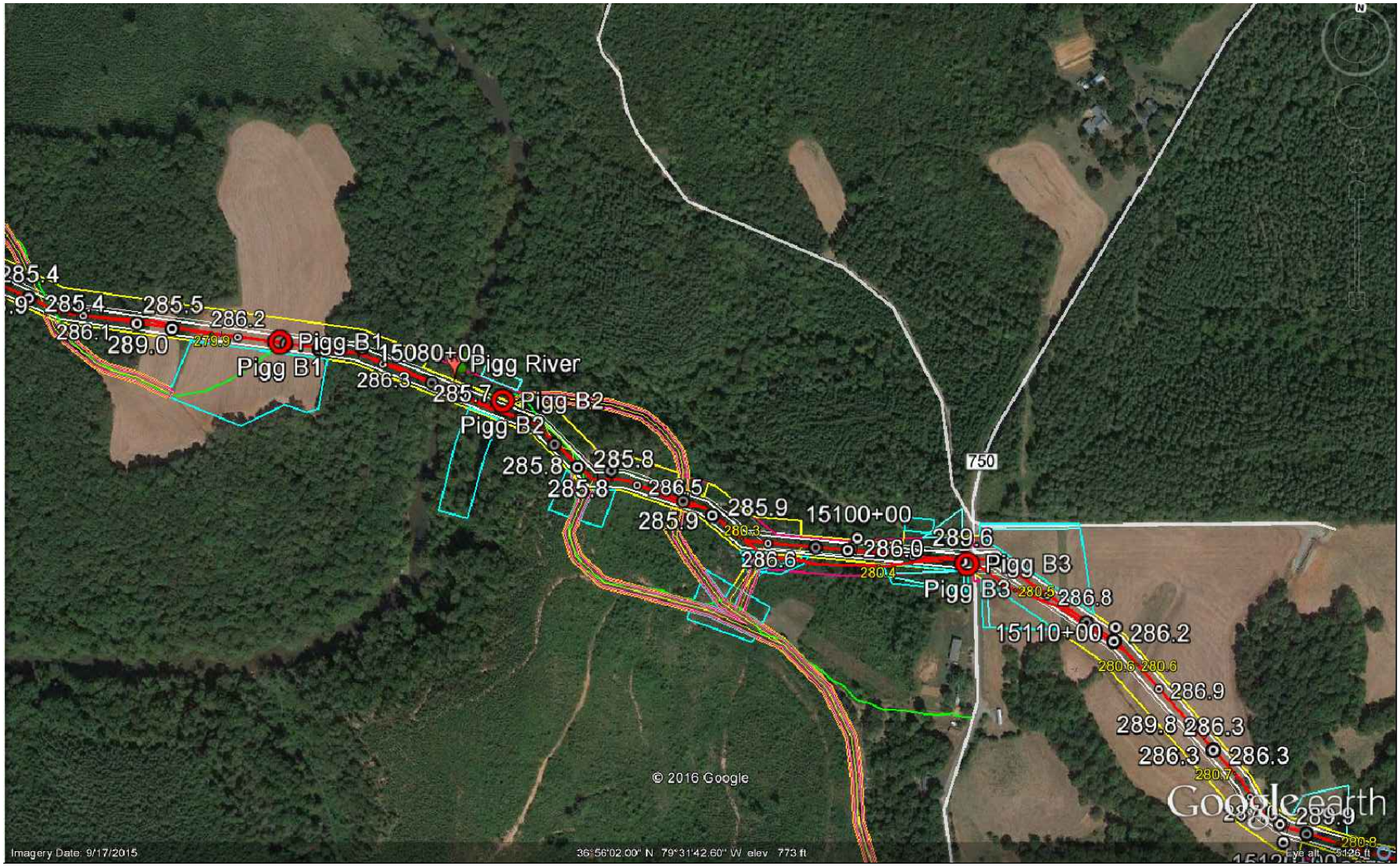

SCALE: NOT TO SCALE	DATE: SEPT. 2016	S&ME	**BORING LOCATION PLAN**	FIGURE NO.
PROJECT NO. 1358-15-086B	DRAWN BY: RDM	8646 W. MARKET ST., SUITE 105 GREENSBORO, NC 27409 PH. 336-288-7180 FAX. 336-288-8980	MOUNTAIN VALLEY PIPELINE PIGG RIVER CROSSING PITTSYLVANIA COUNTY, VIRGINIA	1
	CHECKED BY: SEH	**WWW.SMEINC.COM**		

DRAWING PATH: **Q:\1358\2015\15-086 - MVP PIGG RIVER SITE\B\MVP Pigg River Crossing BLP.dwg**

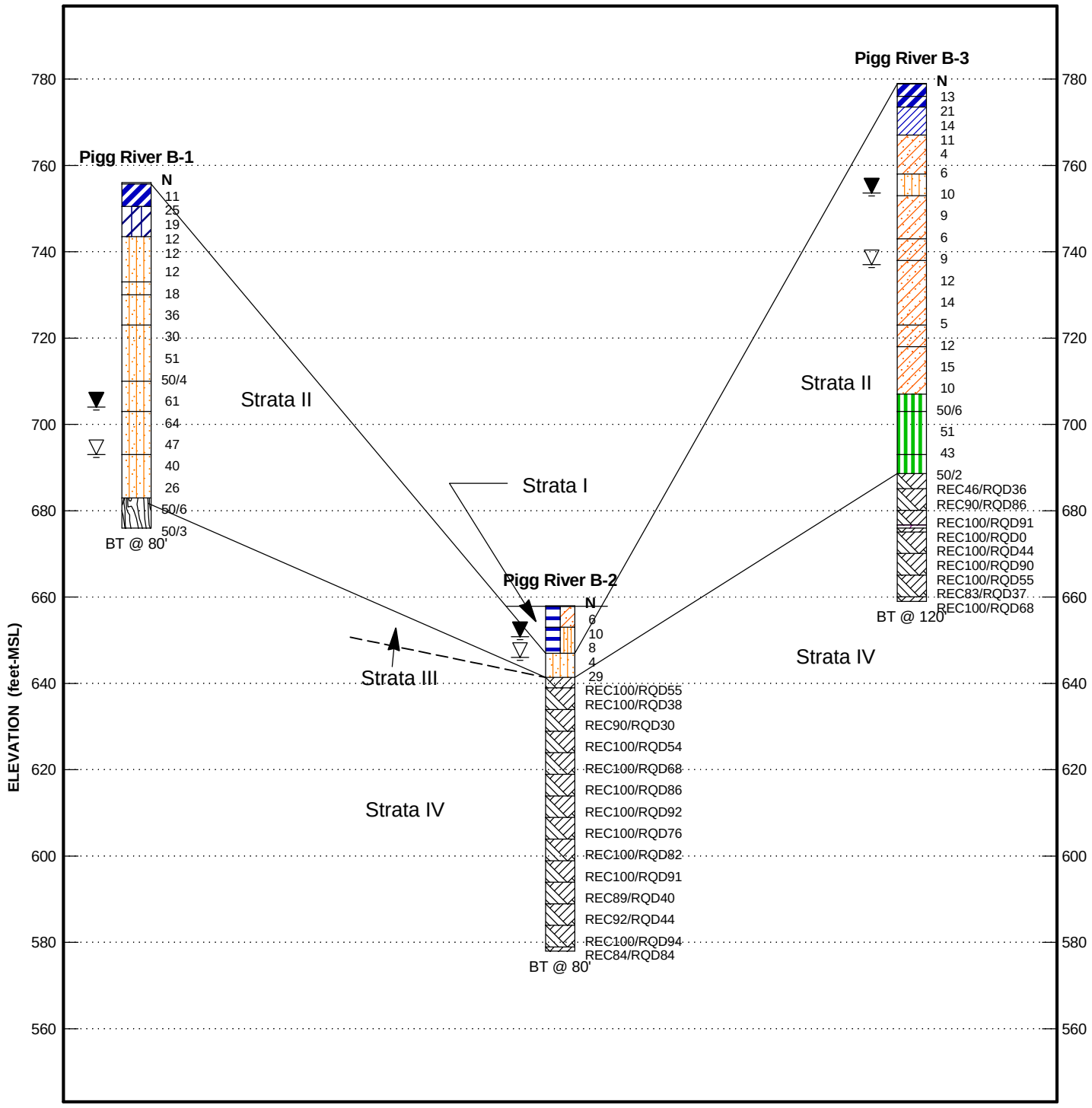

CH, High Plasticity Clay
SM, Silty Sand
Topsoil
ML, Low Plasticity Silt
Silty Clay
Weathered Rock
Mica Schist
CL, Low Plasticity Clay
SC, Clayey Sand
Alluvial
24 hr Water Level
TOB Water Level

N = Standard Penetration Test resistance value (blows per foot). The depicted stratigraphy is shown for illustrative purposes only. The actual subsurface conditions will vary between boring locations. Elevations are approximate.

JOB NO: 1358-15-086B	S&ME	Diagram: Generalized Subsurface Profile	Figure 2
DATE: 9/22/16		Project: Mountain Valley Pipeline Location: Various Locations	

Appendix II – Soil Test Borings

Legend to Soil Classification and Symbols
Boring Logs
Rock Core Photos (6 page)

LEGEND TO SOIL CLASSIFICATION AND SYMBOLS

SOIL TYPES

(Shown in Graphic Log)

Fill

Asphalt

Concrete

Topsoil

Gravel

SP, Poorly Graded Sand

Silt

CH, High Plasticity Clay

MH, High Plasticity Silt

SM, Silty Sand

SC, Clayey Sand

SP/SM, Poorly-Graded Sand with Silt

SP/SC, Poorly-Graded Sand with Clay

ML, Low Plasticity Silt

CL, Low Plasticity Clay

Partially Weathered Rock

Cored Rock

WATER LEVELS

(Shown in Water Level Column)

▽ = Water Level At Termination of Boring
▼ = Water Level Taken After 24 Hours
◄ = Loss of Drilling Water
HC = Hole Cave

CONSISTENCY OF COHESIVE SOILS

CONSISTENCY	STD. PENETRATION RESISTANCE BLOWS/FOOT
Very Soft	0 to 2
Soft	3 to 4
Firm	5 to 8
Stiff	9 to 15
Very Stiff	16 to 30
Hard	31 to 50
Very Hard	Over 50

RELATIVE DENSITY OF COHESIONLESS SOILS

RELATIVE DENSITY	STD. PENETRATION RESISTANCE BLOWS/FOOT
Very Loose	0 to 4
Loose	5 to 10
Medium Dense	11 to 30
Dense	31 to 50
Very Dense	Over 50

SAMPLER TYPES

(Shown in Samples Column)

Shelby Tube

Split Spoon

Rock Core

No Recovery

TERMS

Standard Penetration Resistance - The Number of Blows of 140 lb. Hammer Falling 30 in. Required to Drive 1.4 in. I.D. Split Spoon Sampler 1 Foot. As Specified in ASTM D-1586.

REC - Total Length of Rock Recovered in the Core Barrel Divided by the Total Length of the Core Run Times 100%.

RQD - Total Length of Sound Rock Segments Recovered that are Longer Than or Equal to 4" (mechanical breaks excluded) Divided by the Total Length of the Core Run Times 100%.

S&ME
ENGINEERING • TESTING
ENVIRONMENTAL SERVICES

PROJECT:	**Mountain Valley Pipeline** **Greenbrier River/RT 15 and RR Crossing** **S&ME Project No. 1358-15-086A**	**BORING LOG**	**Pigg River B-1**

DATE DRILLED: **8/2/16**	ELEVATION: **756 ft**	NOTES: **1. Boring tremie grouted with cement-bentonite grout.**	
DRILL RIG: **D-50**	BORING DEPTH: **80 ft**		
DRILLER: **D. Lowe**	WATER LEVEL: **52 ft 24 hr,63 ft TOB**		
HAMMER TYPE: **140-lb Automatic**	LOGGED BY: **S. Metzger**		
SAMPLING METHOD: **Split Spoon**		LATITUDE: **36.93360**	LONGITUDE: **-79.54035**

DRILLING METHOD: **3¼" H.S.A.**

DEPTH (feet)	MATERIAL DESCRIPTION	ELEVATION (feet)	SAMPLE NO.	SAMPLE TYPE	BLOW COUNT / CORE DATA 1st 6in / RUN #	2nd 6in / REC	3rd 6in / RQD	STANDARD PENETRATION TEST DATA (blows/ft) / REMARKS	N VALUE
	CULTIVATED SOIL (4 inches)								
	RESIDUUM: FAT CLAY (CH) stiff to very stiff, maroon, little mica, trace chert, dry to moist		1		3	4	7		11
			2		5	15	10		25
5		751.0							
	SILTY CLAY (CL) very stiff to stiff, maroon, few mica, few fine to medium sand, white staining, moist		3		7	10	9		19
			4		3	5	7		12
10		746.0							
	SILTY SAND (SM) medium dense, maroon tan, little mica, little fine to medium sand, black and white staining, moist		5		3	4	8		12
15		741.0							
			6		2	5	7		12
20		736.0							
	SILTY SAND (SM) medium dense, maroon tan white, little mica, little fine to medium sand, trace fine gravel, black staining, moist		7		5	5	13	35% passing #200 sieve	18
25		731.0							
	SILTY SAND (SM) dense, maroon olive gray, little mica, few fine to medium sand, black staining, moist		8		3	16	20		36
30		726.0							
			9		4	12	18		30

S&ME BORING LOG 1358-15-086 MVP GINT FILE KNOXVILLE.GPJ S&ME.GDT 10/10/16

NOTES:

1. ***THIS LOG IS ONLY A PORTION OF A REPORT PREPARED FOR THE NAMED PROJECT AND MUST ONLY BE USED TOGETHER WITH THAT REPORT.***
2. ***BORING, SAMPLING AND PENETRATION TEST DATA IN GENERAL ACCORDANCE WITH ASTM D-1586.***
3. ***STRATIFICATION AND GROUNDWATER DEPTHS ARE NOT EXACT.***
4. ***WATER LEVEL IS AT TIME OF EXPLORATION AND WILL VARY.***

S&ME

PROJECT:	**Mountain Valley Pipeline** **Greenbrier River/RT 15 and RR Crossing** **S&ME Project No. 1358-15-086A**	**BORING LOG**	**Pigg River B-1**
DATE DRILLED: **8/2/16**	ELEVATION: **756 ft**	NOTES: **1. Boring tremie grouted with cement-bentonite grout.**	
DRILL RIG: **D-50**	BORING DEPTH: **80 ft**		
DRILLER: **D. Lowe**	WATER LEVEL: **52 ft 24 hr,63 ft TOB**		
HAMMER TYPE: **140-lb Automatic**	LOGGED BY: **S. Metzger**		
SAMPLING METHOD: **Split Spoon**		LATITUDE: **36.93360**	LONGITUDE: **-79.54035**
DRILLING METHOD: **3¼" H.S.A.**			

DEPTH (feet)	MATERIAL DESCRIPTION	ELEVATION (feet)	SAMPLE NO.	SAMPLE TYPE	BLOW COUNT / CORE DATA 1st 6in / RUN #	2nd 6in / REC	3rd 6in / RQD	STANDARD PENETRATION TEST DATA (blows/ft) / REMARKS	N VALUE
40	**SILTY SAND (SM)** medium dense to very dense, maroon tan dark gray, little mica, trace fine to coarse sand, few fine gravel, black staining, moist *(continued)*	716.0	10		12	26	25		51
45		711.0	11		23	50/4			50/4
50	**SILTY SAND (SM)** very dense, maroon tan dark gray, little mica, trace fine to coarse sand, black staining, moist	706.0	12		4	21	40		61
55	**SILTY SAND (SM)** very dense to dense, maroon pink white brown, few mica, trace fine to medium sand, trace fine gravel, black staining, moist	701.0	13		12	24	40	40.4% passing #200 sieve	64
60		696.0	14		10	28	19	LL 41; PL 40	47
65	**SILTY SAND (SM)** dense to medium dense, maroon, little mica, little medium to coarse sand, black staining, moist	691.0	15		9	15	25		40
			16		8	11	15		26

WATER LEVEL: ▼ 52 ft 24 hr; ▽ 63 ft TOB

STANDARD PENETRATION TEST DATA (blows/ft) / REMARKS: 10 20 30 60 80

S&ME BORING LOG 1358-15-086 MVP GINT FILE KNOXVILLE.GPJ S&ME.GDT 10/10/16

NOTES:

1. *THIS LOG IS ONLY A PORTION OF A REPORT PREPARED FOR THE NAMED PROJECT AND MUST ONLY BE USED TOGETHER WITH THAT REPORT.*
2. *BORING, SAMPLING AND PENETRATION TEST DATA IN GENERAL ACCORDANCE WITH ASTM D-1586.*
3. *STRATIFICATION AND GROUNDWATER DEPTHS ARE NOT EXACT.*
4. *WATER LEVEL IS AT TIME OF EXPLORATION AND WILL VARY.*

S&ME

PROJECT: **Mountain Valley Pipeline**
Greenbrier River/RT 15 and RR Crossing
S&ME Project No. 1358-15-086A

BORING LOG **Pigg River B-1**

DATE DRILLED: **8/2/16**	ELEVATION: **756 ft**	NOTES: **1. Boring tremie grouted with cement-bentonite grout.**
DRILL RIG: **D-50**	BORING DEPTH: **80 ft**	
DRILLER: **D. Lowe**	WATER LEVEL: **52 ft 24 hr,63 ft TOB**	
HAMMER TYPE: **140-lb Automatic**	LOGGED BY: **S. Metzger**	
SAMPLING METHOD: **Split Spoon**	LATITUDE: **36.93360**	LONGITUDE: **-79.54035**

DRILLING METHOD: **3¼" H.S.A.**

DEPTH (feet)	GRAPHIC LOG	MATERIAL DESCRIPTION	WATER LEVEL	ELEVATION (feet)	SAMPLE NO.	SAMPLE TYPE	BLOW COUNT / CORE DATA 1st 6in / RUN #	2nd 6in / REC	3rd 6in / RQD	STANDARD PENETRATION TEST DATA (blows/ft) / REMARKS	N VALUE
75		**WEATHERED ROCK SAMPLED AS CLAYEY FINE TO MEDIUM SAND (SC)** very hard, maroon and gray, little mica, black staining, dry		681.0	17		13	50/6		19% passing #200 sieve	50/6
80		Boring terminated at 80 ft		676.0	18		41	50/3			50/3

10 20 30 60 80

S&ME BORING LOG 1358-15-086 MVP GINT FILE KNOXVILLE.GPJ S&ME.GDT 10/10/16

NOTES:

1. ***THIS LOG IS ONLY A PORTION OF A REPORT PREPARED FOR THE NAMED PROJECT AND MUST ONLY BE USED TOGETHER WITH THAT REPORT.***
2. ***BORING, SAMPLING AND PENETRATION TEST DATA IN GENERAL ACCORDANCE WITH ASTM D-1586.***
3. ***STRATIFICATION AND GROUNDWATER DEPTHS ARE NOT EXACT.***
4. ***WATER LEVEL IS AT TIME OF EXPLORATION AND WILL VARY.***

S&ME

PROJECT: **Mountain Valley Pipeline**
Greenbrier River/RT 15 and RR Crossing
S&ME Project No. 1358-15-086A

BORING LOG **Pigg River B-2**

DATE DRILLED: **8/10/16**	ELEVATION: **658 ft**	NOTES: **1. Boring tremie grouted with cement-bentonite grout. 2. Coordinater to be remeasured in field.**
DRILL RIG: **D-50**	BORING DEPTH: **80 ft**	
DRILLER: **D. Lowe**	WATER LEVEL: **7.2 ft 72 hr,12.0 ft TOB**	
HAMMER TYPE: **140-lb Automatic**	LOGGED BY: **S. Metzger**	
SAMPLING METHOD: **Split Spoon, NQ Core**		LATITUDE: **36.93335** LONGITUDE: **-79.53757**
DRILLING METHOD: **3¼" H.S.A., NQ Core**		

DEPTH (feet)	MATERIAL DESCRIPTION	ELEVATION (feet)	SAMPLE NO.	BLOW COUNT / CORE DATA 1st 6in / RUN #	2nd 6in / REC	3rd 6in / RQD	N VALUE
	TOPSOIL (1 inch)						
	ALLUVIUM: CLAYEY SAND (SC) loose, brown, few mica, fine to medium, black staining, moist		1	3	2	4	6
5			2	2	4	6	10
	ALLUVIUM: SILTY SAND (SM) loose to very loose, brown, few fine to coarse gravel, few mica, fine to coarse, moist	653.0	3	4	4	4	8
10		648.0	4	2	2	2	4
	RESIDUUM: SILTY SAND (SM) medium dense, brown, some rock fragments, few mica, fine to coarse, moist		5	2	13	16	29
15		643.0	1		100%	55%	
	MICA SCHIST light gray and dark gray, very hard, continuous, fair, moderately severe weathering red staining on fracture surfaces estimated MOH hardness of 1-3						
20		638.0	2		100%	38%	
	MICA SCHIST light gray and dark gray, very hard, continuous, poor, moderate weathering red staining on fracture surfaces estimated MOH hardness of 1-3						
25	quartzite intervals from about 20.5' to 21.8' white and gray, slight weathering, estimated MOH hardness of 7-8	633.0	3		90%	30%	
	MICA SCHIST light gray and dark gray, hard, continuous, poor, moderate weathering red staining on fracture surfaces slight weathering from about 24.1' to 26.0' estimated MOH hardness of 1-3						
30		628.0	4		100%	54%	

STANDARD PENETRATION TEST DATA (blows/ft) / REMARKS

10 20 30 60 80

Refusal at 16.5 feet, start NQ Coring

S&ME BORING LOG 1358-15-086 MVP GINT FILE KNOXVILLE.GPJ S&ME.GDT 10/10/16

NOTES:

1. ***THIS LOG IS ONLY A PORTION OF A REPORT PREPARED FOR THE NAMED PROJECT AND MUST ONLY BE USED TOGETHER WITH THAT REPORT.***
2. ***BORING, SAMPLING AND PENETRATION TEST DATA IN GENERAL ACCORDANCE WITH ASTM D-1586.***
3. ***STRATIFICATION AND GROUNDWATER DEPTHS ARE NOT EXACT.***
4. ***WATER LEVEL IS AT TIME OF EXPLORATION AND WILL VARY.***

S&ME

PROJECT:	**Mountain Valley Pipeline** **Greenbrier River/RT 15 and RR Crossing** **S&ME Project No. 1358-15-086A**	**BORING LOG**	**Pigg River B-2**

DATE DRILLED: **8/10/16**	ELEVATION: **658 ft**	NOTES: **1. Boring tremie grouted with cement-bentonite grout.** **2. Coordinater to be remeasured in field.**
DRILL RIG: **D-50**	BORING DEPTH: **80 ft**	
DRILLER: **D. Lowe**	WATER LEVEL: **7.2 ft 72 hr,12.0 ft TOB**	
HAMMER TYPE: **140-lb Automatic**	LOGGED BY: **S. Metzger**	
SAMPLING METHOD: **Split Spoon, NQ Core**		LATITUDE: **36.93335** / LONGITUDE: **-79.53757**
DRILLING METHOD: **3¼" H.S.A., NQ Core**		

DEPTH (feet)	MATERIAL DESCRIPTION	ELEVATION (feet)	SAMPLE NO.	1st 6in / RUN #	2nd 6in / REC	3rd 6in / RQD	STANDARD PENETRATION TEST DATA (blows/ft) / REMARKS
	MICA SCHIST light gray and dark gray, hard, continuous, fair, moderate weathering red staining on fracture surfaces estimated MOH hardness of 1-3		5		100%	68%	
40	**MICA SCHIST** light gray and dark gray, very hard, continuous, fair, slight weathering red staining on fracture surfaces estimated MOH hardness of 1-3 *(continued)*	618.0	6		100%	86%	
45	**MICA SCHIST** light gray and dark gray, hard, continuous, good, slight weathering red staining on fracture surfaces moderate weathering from about 35.2' to 35.8' estimated MOH hardness of 1-3	613.0	7		100%	92%	
50	**MICA SCHIST** light gray and dark gray, hard, continuous, excellent, fresh weathering estimated MOH hardness of 1-3	608.0	8		100%	76%	
	MICA SCHIST light gray and dark gray, hard, continuous, good, fresh weathering estimated MOH hardness of 1-3						
55	**MICA SCHIST** light gray and dark gray, hard, continuous, good, fresh weathering estimated MOH hardness of 2-4	603.0	9		100%	82%	Unconfined rock strength 6,685 psi at 57.1'
60	**MICA SCHIST** light gray and dark gray, hard, continuous, good, fresh weathering estimated MOH hardness of 3-4	598.0	10		100%	91%	Unconfined rock strength 9,951 psi at 60.7'
65	**MICA SCHIST** light gray and dark gray, hard, fairly continuous, poor, very slight weathering estimated MOH hardness of 2-4	593.0	11		89%	40%	

BLOW COUNT / CORE DATA

STANDARD PENETRATION TEST DATA (blows/ft) / REMARKS — 10 20 30 60 80

N VALUE

S&ME BORING LOG 1358-15-086 MVP GINT FILE KNOXVILLE.GPJ S&ME.GDT 10/10/16

NOTES:

1. ***THIS LOG IS ONLY A PORTION OF A REPORT PREPARED FOR THE NAMED PROJECT AND MUST ONLY BE USED TOGETHER WITH THAT REPORT.***
2. ***BORING, SAMPLING AND PENETRATION TEST DATA IN GENERAL ACCORDANCE WITH ASTM D-1586.***
3. ***STRATIFICATION AND GROUNDWATER DEPTHS ARE NOT EXACT.***
4. ***WATER LEVEL IS AT TIME OF EXPLORATION AND WILL VARY.***

S&ME

PROJECT: **Mountain Valley Pipeline**
Greenbrier River/RT 15 and RR Crossing
S&ME Project No. 1358-15-086A

BORING LOG **Pigg River B-2**

DATE DRILLED: **8/10/16**
ELEVATION: **658 ft**
DRILL RIG: **D-50**
BORING DEPTH: **80 ft**
DRILLER: **D. Lowe**
WATER LEVEL: **7.2 ft 72 hr,12.0 ft TOB**
HAMMER TYPE: **140-lb Automatic**
LOGGED BY: **S. Metzger**
SAMPLING METHOD: **Split Spoon, NQ Core**
DRILLING METHOD: **3¼" H.S.A., NQ Core**

NOTES: **1. Boring tremie grouted with cement-bentonite grout.**
2. Coordinater to be remeasured in field.

LATITUDE: **36.93335**
LONGITUDE: **-79.53757**

DEPTH (feet)	MATERIAL DESCRIPTION	ELEVATION (feet)	SAMPLE NO.	1st 6in / RUN #	2nd 6in / REC	3rd 6in / RQD	STANDARD PENETRATION TEST DATA (blows/ft) / REMARKS (10 20 30 60 80)	N VALUE
	MICA SCHIST light gray and dark gray, hard, continuous, poor, very slight weathering red staining on fracture surfaces estimated MOH hardness of 1-4 moderate weathering and estimated MOH hardness of 4-7 from about 69.9' to 70.4' *(continued)*		12		92%	44%		
75		583.0						
	MICA SCHIST light gray and dark gray, hard, continuous, excellent, fresh weathering estimated MOH hardness of 1-4 quartzite intervals from about 76.4' to 76.7' white, purple, and gray, estimated MOH hardness of 7-8		13		100%	94%		
80		578.0	14		84%	84%		
	MICA SCHIST light gray and dark gray, hard, fairly continuous, good, fresh weathering estimated MOH hardness of 1-3							
	Boring terminated at 80 ft							

S&ME BORING LOG 1358-15-086 MVP GINT FILE KNOXVILLE.GPJ S&ME.GDT 10/10/16

NOTES:

1. ***THIS LOG IS ONLY A PORTION OF A REPORT PREPARED FOR THE NAMED PROJECT AND MUST ONLY BE USED TOGETHER WITH THAT REPORT.***
2. ***BORING, SAMPLING AND PENETRATION TEST DATA IN GENERAL ACCORDANCE WITH ASTM D-1586.***
3. ***STRATIFICATION AND GROUNDWATER DEPTHS ARE NOT EXACT.***
4. ***WATER LEVEL IS AT TIME OF EXPLORATION AND WILL VARY.***

S&ME

PROJECT: **Mountain Valley Pipeline**
Greenbrier River/RT 15 and RR Crossing
S&ME Project No. 1358-15-086A

BORING LOG **Pigg River B-3**

DATE DRILLED: **8/3/16**	ELEVATION: **779 ft**	NOTES: **1. Boring tremie grouted with cement-bentonite grout.**
DRILL RIG: **D-50**	BORING DEPTH: **120 ft**	
DRILLER: **D. Lowe**	WATER LEVEL: **25.4 ft 72 hr,42.0 ft TOB**	
HAMMER TYPE: **140-lb Automatic**	LOGGED BY: **S. Metzger**	
SAMPLING METHOD: **Split Spoon, NQ Core**	LATITUDE: **36.93214**	LONGITUDE: **-79.53163**
DRILLING METHOD: **3¼" H.S.A., NQ Core**		

DEPTH (feet)	MATERIAL DESCRIPTION	ELEVATION (feet)	SAMPLE NO.	1st 6in / RUN #	2nd 6in / REC	3rd 6in / RQD	N VALUE
	TOPSOIL (1 inch)						
	RESIDUUM: FAT CLAY (CH) stiff, maroon, little fine to medium sand, few mica, trace fine roots and mold, dry to moist		1	6	5	8	13
5	**FAT CLAY (CH)** very stiff, maroon, little fine to medium sand, few mica, dry to moist	774.0	2	5	9	12	21
	SILTY CLAY (CL) stiff, maroon tan, little fine to medium sand, few mica, moist		3	5	7	7	14
10		769.0	4	4	5	6	11
	SILTY CLAY SAND (SC) very loose to loose, brown tan, fine, black staining, moist		5	2	2	2	4
15		764.0					
20		759.0	6	3	3	3	6
	SILTY SAND (SM) loose, gray brown tan, trace mica, fine, black staining, moist		7	4	4	6	10
25	▼	754.0					
	SILTY CLAY SAND (SC) loose, brown tan white, fine, black staining, very moist		8	2	3	6	9
30		749.0					
			9	0	2	4	6

STANDARD PENETRATION TEST DATA (blows/ft) / REMARKS — 10 20 30 60 80

S&ME BORING LOG 1358-15-086 MVP GINT FILE KNOXVILLE.GPJ S&ME.GDT 10/10/16

NOTES:

1. *THIS LOG IS ONLY A PORTION OF A REPORT PREPARED FOR THE NAMED PROJECT AND MUST ONLY BE USED TOGETHER WITH THAT REPORT.*
2. *BORING, SAMPLING AND PENETRATION TEST DATA IN GENERAL ACCORDANCE WITH ASTM D-1586.*
3. *STRATIFICATION AND GROUNDWATER DEPTHS ARE NOT EXACT.*
4. *WATER LEVEL IS AT TIME OF EXPLORATION AND WILL VARY.*

S&ME

PROJECT: **Mountain Valley Pipeline** **Greenbrier River/RT 15 and RR Crossing** **S&ME Project No. 1358-15-086A**	**BORING LOG** **Pigg River B-3**

DATE DRILLED: **8/3/16**	ELEVATION: **779 ft**	NOTES: **1. Boring tremie grouted with cement-bentonite grout.**
DRILL RIG: **D-50**	BORING DEPTH: **120 ft**	
DRILLER: **D. Lowe**	WATER LEVEL: **25.4 ft 72 hr,42.0 ft TOB**	
HAMMER TYPE: **140-lb Automatic**	LOGGED BY: **S. Metzger**	
SAMPLING METHOD: **Split Spoon, NQ Core**	LATITUDE: **36.93214**	LONGITUDE: **-79.53163**
DRILLING METHOD: **3¼" H.S.A., NQ Core**		

DEPTH (feet)	MATERIAL DESCRIPTION	ELEVATION (feet)	SAMPLE NO.	SAMPLE TYPE	BLOW COUNT / CORE DATA 1st 6in / RUN #	2nd 6in / REC	3rd 6in / RQD	N VALUE
40	**SILTY CLAY SAND (SC)** loose, maroon gray black, with fine gravel seam, fine, black staining, very moist	739.0	10		0	3	6	9
45	**SILTY CLAY SAND (SC)** medium dense to loose, maroon gray black, fine, black staining, very moist, no recovery of sample #12	734.0	11		2	3	9	12
50		729.0	12		5	4	10	14
55		724.0	13		3	2	3	5
60	**SILTY CLAY SAND (SC)** medium dense, brown tan, with fine gravel seam, fine, black staining, very moist	719.0	14		0	3	9	12
65	**SILTY CLAY SAND (SC)** medium dense to loose, brown tan, fine, black staining, very moist, no recovery of sample #16	714.0	15		0	5	10	15
			16		3	4	6	10

STANDARD PENETRATION TEST DATA (blows/ft) / REMARKS
10 20 30 60 80

S&ME BORING LOG 1358-15-086 MVP GINT FILE KNOXVILLE.GPJ S&ME.GDT 10/10/16

NOTES:

1. ***THIS LOG IS ONLY A PORTION OF A REPORT PREPARED FOR THE NAMED PROJECT AND MUST ONLY BE USED TOGETHER WITH THAT REPORT.***
2. ***BORING, SAMPLING AND PENETRATION TEST DATA IN GENERAL ACCORDANCE WITH ASTM D-1586.***
3. ***STRATIFICATION AND GROUNDWATER DEPTHS ARE NOT EXACT.***
4. ***WATER LEVEL IS AT TIME OF EXPLORATION AND WILL VARY.***

S&ME

PROJECT:	**Mountain Valley Pipeline** **Greenbrier River/RT 15 and RR Crossing** **S&ME Project No. 1358-15-086A**	**BORING LOG**	**Pigg River B-3**
DATE DRILLED: **8/3/16**	ELEVATION: **779 ft**	NOTES: **1. Boring tremie grouted with cement-bentonite grout.**	
DRILL RIG: **D-50**	BORING DEPTH: **120 ft**		
DRILLER: **D. Lowe**	WATER LEVEL: **25.4 ft 72 hr,42.0 ft TOB**		
HAMMER TYPE: **140-lb Automatic**	LOGGED BY: **S. Metzger**		
SAMPLING METHOD: **Split Spoon, NQ Core**		LATITUDE: **36.93214**	LONGITUDE: **-79.53163**
DRILLING METHOD: **3¼" H.S.A., NQ Core**			

DEPTH (feet)	MATERIAL DESCRIPTION	ELEVATION (feet)	SAMPLE NO.	SAMPLE TYPE	BLOW COUNT / CORE DATA 1st 6in / RUN #	2nd 6in / REC	3rd 6in / RQD	STANDARD PENETRATION TEST DATA (blows/ft) / REMARKS	N VALUE
75	**SILT (ML)** very hard, gray maroon tan, few fine to medium sand, few mica, few fine gravel, moist	704.0	17		4	15	50/6		50/6
80	**SILT (ML)** very hard to hard, maroon tan, few fine to medium sand, few mica, black staining, moist	699.0	18		17	22	29		51
85		694.0	19		6	12	31		43
90	**SILT (ML)** very hard, brown, little fine to medium sand, little mica, few fine gravel, black staining, very moist	689.0	20		17	50/2			50/2
95	**MICA SCHIST** light gray and dark gray, moderately soft, competent, poor, moderate weathering very soft about 91.0' 6" drop about 93.0' estimated MOH hardness of 1-3	684.0	1			46%	36%	Refusal at 91 feet, Start NQ Coring	
	MICA SCHIST light gray and dark gray, very hard, continuous, good, slight weathering red staining on fracture surfaces estimated MOH hardness of 1-3		2			90%	86%		
100	**MICA SCHIST** light gray and dark gray, very hard, continuous, excellent, slight weathering red staining on fracture surfaces estimated MOH hardness of 1-3	679.0	3			100%	91%	Unconfined rock strength 6,675 psi at 100.4'	
			4			100%	0%		
			5			100%	44%		

S&ME BORING LOG 1358-15-086 MVP GINT FILE KNOXVILLE.GPJ S&ME.GDT 10/10/16

NOTES:

1. ***THIS LOG IS ONLY A PORTION OF A REPORT PREPARED FOR THE NAMED PROJECT AND MUST ONLY BE USED TOGETHER WITH THAT REPORT.***
2. ***BORING, SAMPLING AND PENETRATION TEST DATA IN GENERAL ACCORDANCE WITH ASTM D-1586.***
3. ***STRATIFICATION AND GROUNDWATER DEPTHS ARE NOT EXACT.***
4. ***WATER LEVEL IS AT TIME OF EXPLORATION AND WILL VARY.***

S&ME

PROJECT:	**Mountain Valley Pipeline** **Greenbrier River/RT 15 and RR Crossing** **S&ME Project No. 1358-15-086A**	**BORING LOG**	**Pigg River B-3**

DATE DRILLED: **8/3/16**	ELEVATION: **779 ft**	NOTES: **1. Boring tremie grouted with cement-bentonite grout.**
DRILL RIG: **D-50**	BORING DEPTH: **120 ft**	
DRILLER: **D. Lowe**	WATER LEVEL: **25.4 ft 72 hr,42.0 ft TOB**	
HAMMER TYPE: **140-lb Automatic**	LOGGED BY: **S. Metzger**	
SAMPLING METHOD: **Split Spoon, NQ Core**		LATITUDE: **36.93214** / LONGITUDE: **-79.53163**
DRILLING METHOD: **3¼" H.S.A., NQ Core**		

DEPTH (feet)	MATERIAL DESCRIPTION	ELEVATION (feet)	SAMPLE NO.	1st 6in / RUN #	2nd 6in / REC	3rd 6in / RQD	STANDARD PENETRATION TEST DATA (blows/ft) / REMARKS	N VALUE
	QUARTZITE purple, very hard, continuous, very poor, moderate weathering estimated MOH hardness of 7-8		6		100%	90%	Unconfined rock strength 4,766 psi at 105.4'	
110	**MICA SCHIST** light gray and dark gray, very hard, continuous, poor, moderate weathering red staining on fracture surfaces estimated MOH hardness of 1-3	669.0	7		100%	55%		
	MICA SCHIST light gray and dark gray, very hard, continuous, excellent, slight weathering estimated MOH hardness of 1-3 *(continued)*							
115	**MICA SCHIST** light gray and dark gray, hard, continuous, fair, slight weathering moderately soft from about 110.2' to 110.4', 110.9' to 111.2', and 113.0' to 113.9' soft and very severe weathering from about 110.4' to 110.9' estimated MOH hardness of 1-3	664.0	8		83%	37%	Unconfined rock strength 2,826 psi at 115'	
120	**MICA SCHIST** light gray and dark gray, hard, fairly continuous, poor, moderate weathering moderately hard from about 115.7' to 116.1' moderately soft from about 116.1' to 116.6' and 117.7' to 118.9' soft and very severe weathering from about 116.6' to 117.7' estimated MOH hardness of 1-3	659.0	9		100%	68%		
	MICA SCHIST light gray and dark gray, moderately hard, continuous, fair, moderate weathering soft and severe weathering from about 119.5' to 119.8' moderately soft from about 119.8' to 120.0' estimated MOH hardness of 1-3							
	Boring terminated at 120 ft							

S&ME BORING LOG 1358-15-086 MVP GINT FILE KNOXVILLE.GPJ S&ME.GDT 10/10/16

NOTES:

1. ***THIS LOG IS ONLY A PORTION OF A REPORT PREPARED FOR THE NAMED PROJECT AND MUST ONLY BE USED TOGETHER WITH THAT REPORT.***
2. ***BORING, SAMPLING AND PENETRATION TEST DATA IN GENERAL ACCORDANCE WITH ASTM D-1586.***
3. ***STRATIFICATION AND GROUNDWATER DEPTHS ARE NOT EXACT.***
4. ***WATER LEVEL IS AT TIME OF EXPLORATION AND WILL VARY.***

Rock Core Pictures
Mountain Valley Pipeline

S&ME
8646 W. Market Street, Suite 105
Greensboro, NC 27409

Project #: 1358-15-086B

Photo 1

Date: 8/23/16

Photographer: S. Metzger

Boring	Boring Pigg River B-2 (Box 1 of 7)
Remarks	Depth = 16.6-25.8 feet

Photo 2

Date: 8/23/16

Photographer: S. Metzger

Boring	Boring Pigg River B-2 (Box 2 of 7)
Remarks	Depth = 25.8-30.3 feet

Rock Core Pictures
Mountain Valley Pipeline

Project #: 1358-15-086B
Sheet 2 of 4

S&ME
8646 W. Market Street, Suite 105
Greensboro, NC 27409

Photo 3		
	Date: 8/23/16	**Photographer:** S. Metzger
Boring	Boring Pigg River B-2 (Box 3 of 7)	
Remarks	Depth = 30.3-44.1 feet	

Photo 4		
	Date: 8/23/16	**Photographer:** S. Metzger
Boring	Boring Pigg River B-2 (Box 4 of 7)	
Remarks	Depth = 44.1-54.1 feet	

Rock Core Pictures
Mountain Valley Pipeline

Project #: 1358-15-086B
Sheet 3 of 4

S&ME
8646 W. Market Street, Suite 105
Greensboro, NC 27409

Photo 5		
	Date: 8/23/16	**Photographer:** S. Metzger
Boring	Boring Pigg River B-2 (Box 5 of 7)	
Remarks	Depth = 54.1-63.0 feet	

Photo 6		
	Date: 8/23/16	**Photographer:** S. Metzger
Boring	Boring Pigg River B-2 (Box 6 of 7)	
Remarks	Depth = 63.0-72.7 feet	

Rock Core Pictures
Mountain Valley Pipeline

Project #: 1358-15-086B
Sheet 4 of 4

8646 W. Market Street, Suite 105
Greensboro, NC 27409

Photo 7

Date: 8/23/16

Photographer: S. Metzger

Boring	Box Pigg River B-2 (Box 7 of 7)
Remarks	Depth = 72.7-80.0 feet

Rock Core Pictures
Mountain Valley Pipeline

8646 W. Market Street, Suite 105
Greensboro, NC 27409

Project #: 1358-15-086B

Photo 1

Date: 8/16/16

Photographer: S. Metzger

Boring	Boring Pigg River B-3 (Box 1 of 3)
Remarks	Depth = 90.4-101.8 feet

Photo 2

Date: 8/16/16

Photographer: S. Metzger

Boring	Boring Pigg River B-3 (Box 2 of 3)
Remarks	Depth = 101.8-111.0 feet

Rock Core Pictures
Mountain Valley Pipeline

Project #: 1358-15-086B
Sheet 2 of 2

S&ME
8646 W. Market Street, Suite 105
Greensboro, NC 27409

Photo 3	
	Date: 8/16/16 **Photographer:** S. Metzger
Boring	Boring Pigg River B-3 (Box 3 of 3)
Remarks	Depth = 111.0-120.0 feet

Appendix III – Laboratory

Summary of Laboratory Test Data
Composite Grain Size Curve
Laboratory Test Results (4 pages)
Rock Core Unconfined Compression Test (9 pages)

SUMMARY OF LABORATORY TEST DATA

Mountain Valley Pipeline - Pigg River Crossing
Pitsylvania County Virginia
S&ME Project No. 1358-15-0086A & B

SAMPLE LOCATION				Sample Type	USCS Classification/ Rock Type	Plasticity			% Silt and Clay	% Sand			% Gravel	Unconfined Compressive Strength (psi)
Boring	Sample #	Depth	Strata			LL	PL	PI		Fine	Medium	Coarse		
Pigg River B-1	7	23.5-25	II	SS	SM				35.2	28.1	23.1	7.8	5.7	
Pigg River B-1	13	53.5-55	II	SS	SM				40.4	20.4	23.4	10.3	5.4	
Pigg River B-1	14	58.5-60	II	SS	SM	41	40	1						
Pigg River B-1	17	73.5-75	III	SS	SM				19.2	27.0	30.2	13.7	8.9	
Pigg River B-2		56.7-57.6	IV	RC	mica schist									6,685
Pigg River B-2		60.5-60.9	IV	RC	mica schist									9,951
Pigg River B-3		99.8-100-8	IV	RC	mica schist									6,675
Pigg River B-3		105.9-106.9	IV	RC	mica schist									4,766
Pigg River B-3		114.8-115.2	IV	RC	mica schist									2,826

SS- Split Spoon Sample

RC- Rock Core

COMPOSITE GRAIN SIZE CURVE
Mountain Valley Pipeline - Pigg River Crossing
Pittsylvania County, Virginia
S&ME Project Number 1586-15-086B

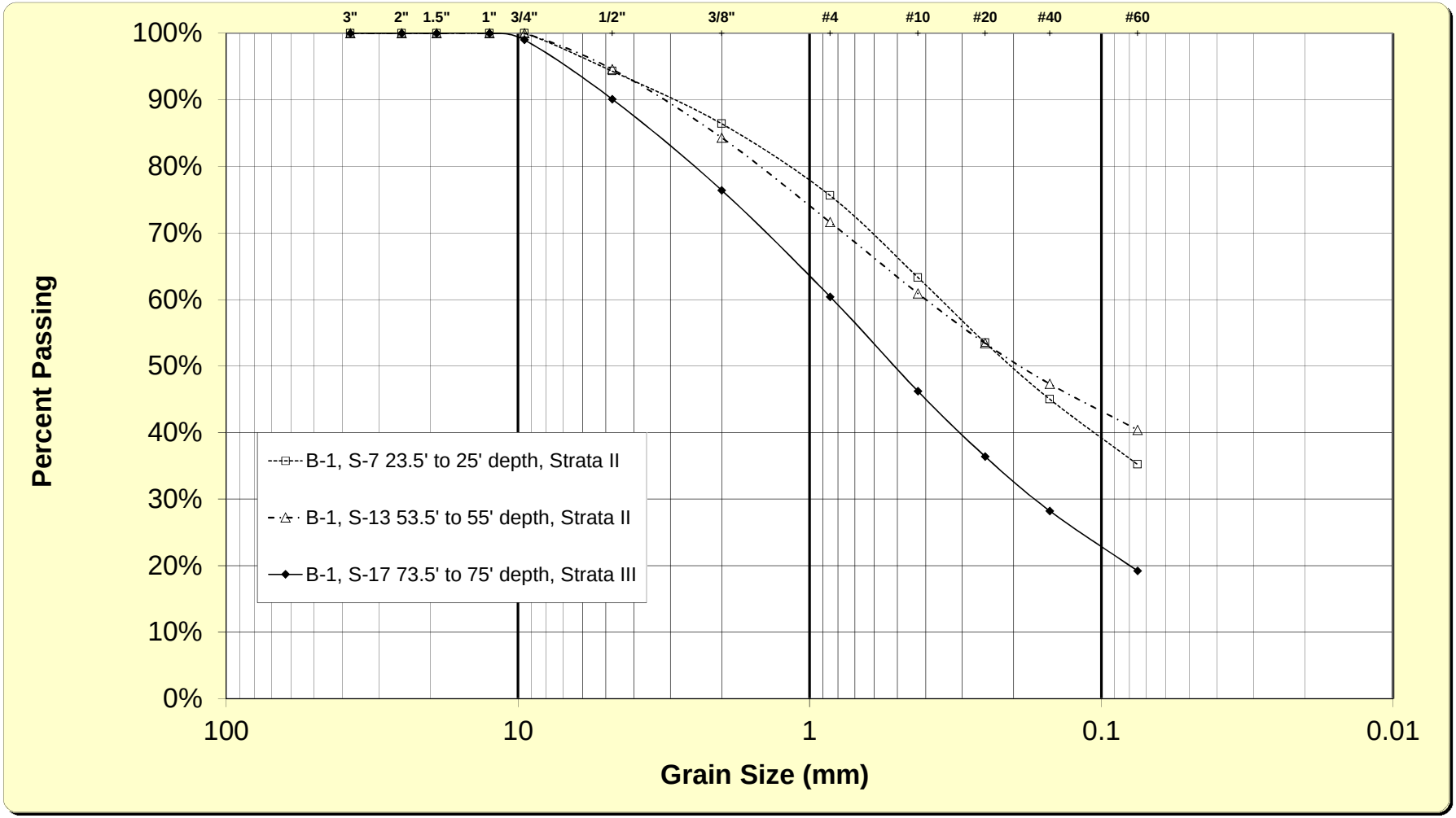

Sieve Analysis of Soils

ASTM D422

Quality Assurance

S&ME, Inc. - Columbus, 6190 Enterprise Ct., Dublin, Ohio

Project #:	**1358-16-086B**	Report Date:	
Project Name:	Mountain Valley Pipeline Subsurface Exploration	Test Date(s):	9/2-6/2016
Sample ID:	Pigg River B-1, S-7, 23.5' to 25.0'		
Location:			
Sample Desc			

Sample Description: Maroon tan white silty fine to medium SAND (SM)

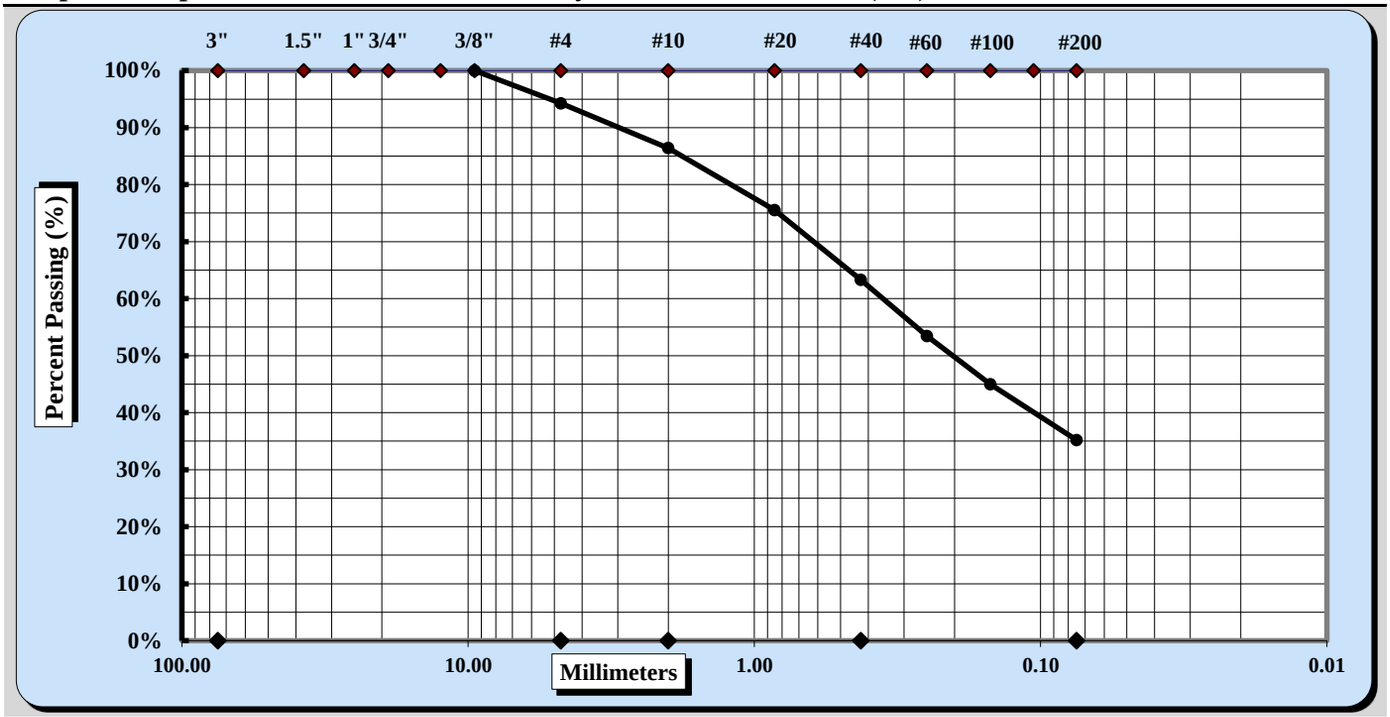

Cobbles	< 300 mm (12") and > 75 mm (3")	Fine Sand	< 0.425 mm and > 0.075 mm (#200)
Gravel	< 75 mm and > 4.75 mm (#4)	Silt	< 0.075 and > 0.005 mm
Coarse Sand	< 4.75 mm and >2.00 mm (#10)	Clay	< 0.005 mm
Medium Sand	< 2.00 mm and > 0.425 mm (#40)	Colloids	< 0.001 mm

Maximum Particle Size	4.75mm	Coarse Sand	7.8%	Fine Sand	28.1%
Gravel	5.7%	Medium Sand	23.1%	Silt & Clay	35.2%
Liquid Limit		Plastic Limit		Plastic Index	

Cc = ###### **Cu =** ######

Coarse Sand	7.8%	Medium Sand	23.1%	Fine Sand	28.1%

Description of Sand & Gravel Particles: Rounded ☐ Angular ☒

Hard & Durable ☒ Soft ☐ Weathered & Friable ☐

Notes / Deviations / References: ASTM D422, D4318, D2487; AASHTO M145

Technical Responsibility	*Signature*	*Position*	*Date*

This report shall not be reproduced, except in full, without the written approval of S&ME, Inc.

Sieve Analysis of Soils

ASTM D422

Quality Assurance

S&ME, Inc. - Columbus, 6190 Enterprise Ct., Dublin, Ohio

Project #:	**1358-16-086A/LAB**	Report Date:	
Project Name:	Mountain Valley Pipeline Subsurface Exploration	Test Date(s):	9/2-6/2016
Sample ID:	Pigg River_B-1, S-13, 53.5' to 55.0'		
Location:			
Sample Desc			

Sample Description: Maroon pink white brown silty fine to medium SAND (SM)

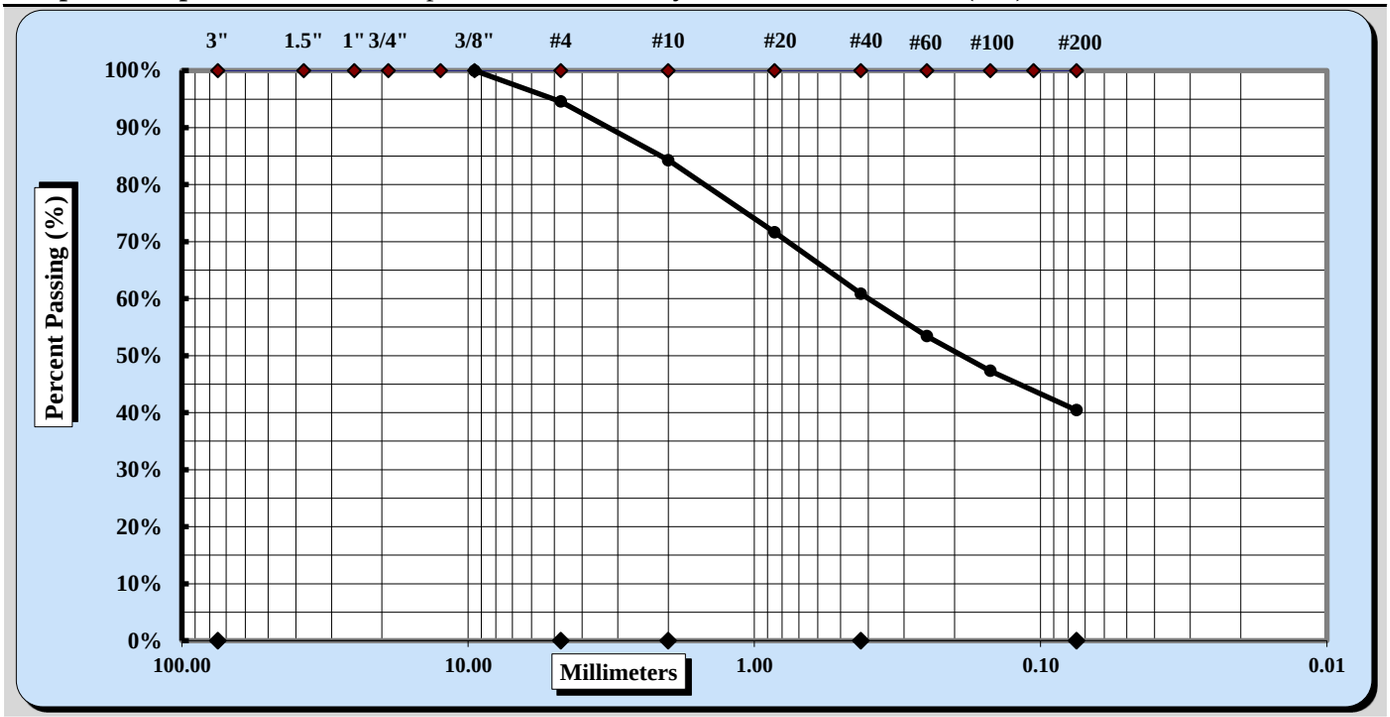

Cobbles	< 300 mm (12") and > 75 mm (3")	Fine Sand	< 0.425 mm and > 0.075 mm (#200)
Gravel	< 75 mm and > 4.75 mm (#4)	Silt	< 0.075 and > 0.005 mm
Coarse Sand	< 4.75 mm and >2.00 mm (#10)	Clay	< 0.005 mm
Medium Sand	< 2.00 mm and > 0.425 mm (#40)	Colloids	< 0.001 mm

Maximum Particle Size	4.75mm	Coarse Sand	10.3%	Fine Sand	20.4%
Gravel	5.4%	Medium Sand	23.4%	Silt & Clay	40.4%

Coarse Sand	10.3%	Medium Sand	23.4%	Fine Sand	20.4%

Description of Sand & Gravel Particles: Rounded ☐ Angular ☒

Hard & Durable ☒ Soft ☐ Weathered & Friable ☐

Notes / Deviations / References: ASTM D422, D4318, D2487; AASHTO M145

Technical Responsibility	*Signature*	*Position*	*Date*

This report shall not be reproduced, except in full, without the written approval of S&ME, Inc.

Sieve Analysis of Soils

ASTM D422

Quality Assurance

S&ME, Inc. - Columbus, 6190 Enterprise Ct., Dublin, Ohio

Project #:	**1358-16-086A**	Report Date:	
Project Name:	Mountain Valley Pipeline Subsurface Exploration	Test Date(s):	9/2-6/2016
Sample ID:	Pigg River B-1, S-17, 73.5' to 75.0'		
Location:			
Sample Desc			

Sample Description: Maroon and gray silty clayey fine to medium SAND (SM)

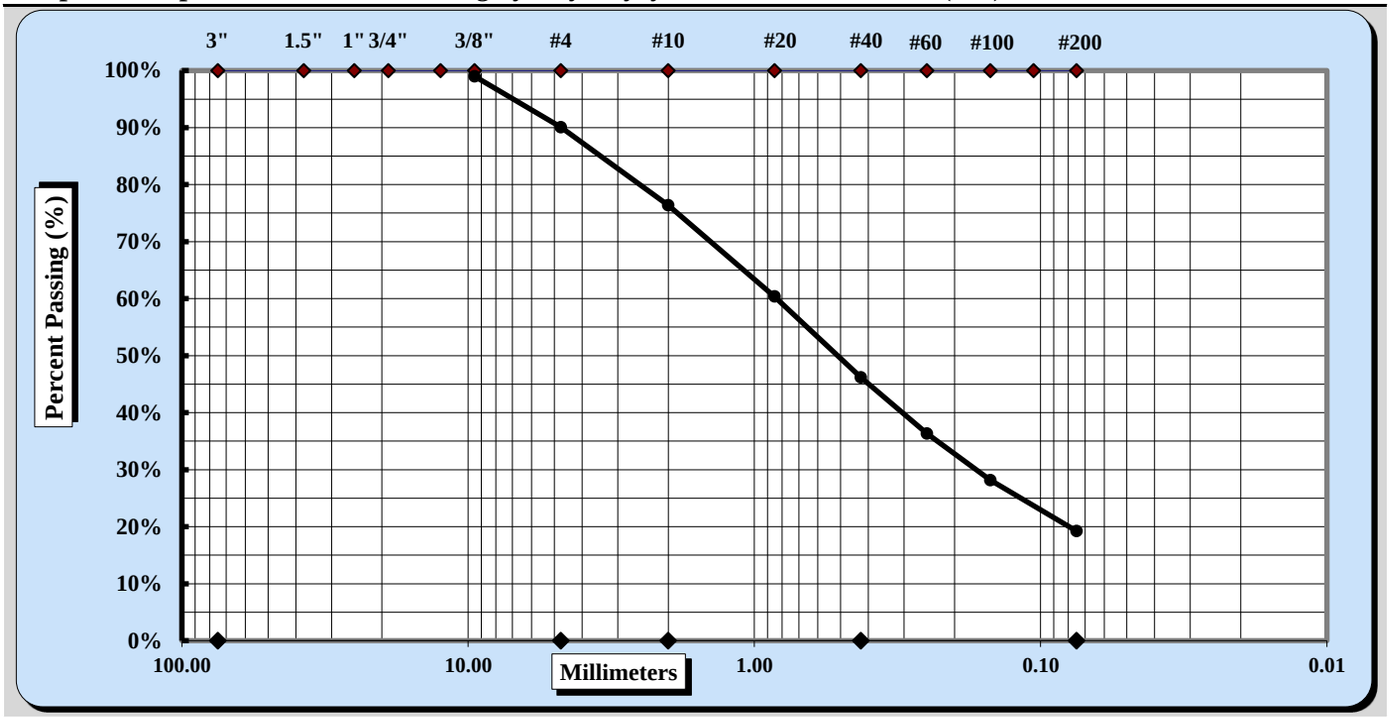

Cobbles	< 300 mm (12") and > 75 mm (3")	Fine Sand	< 0.425 mm and > 0.075 mm (#200)
Gravel	< 75 mm and > 4.75 mm (#4)	Silt	< 0.075 and > 0.005 mm
Coarse Sand	< 4.75 mm and >2.00 mm (#10)	Clay	< 0.005 mm
Medium Sand	< 2.00 mm and > 0.425 mm (#40)	Colloids	< 0.001 mm

Maximum Particle Size	9.50mm	Coarse Sand	13.7%	Fine Sand	27.0%
Gravel	8.9%	Medium Sand	30.2%	Silt & Clay	19.2%

Coarse Sand	13.7%	Medium Sand	30.2%	Fine Sand	27.0%
Description of Sand & Gravel Particles:		Rounded	☐	Angular	☒
Hard & Durable	☒	Soft	☐	Weathered & Friable	☐

Notes / Deviations / References: ASTM D422, D4318, D2487; AASHTO M145

Technical Responsibility	*Signature*	*Position*	*Date*

This report shall not be reproduced, except in full, without the written approval of S&ME, Inc.

Form No. TR-D4318-T89-90
Revision No. 0
Revision Date: 11/20/07

Liquid Limit, Plastic Limit, and Plastic Index

ASTM D4318 ☐ *AASHTO T 89* ☒ *AASHTO T 90* ☒ ***Quality Assurance***

S&ME, Inc. - Columbus, 6190 Enterprise Ct., Dublin, Ohio

Project #:	**1358-15-086A**	Report Date:	
Project Name:	Mountain Valley Pipeline	Test Date(s)	9/7/2016
Client Name:	Rummel Klepper & Kahl, LLP		
Client Address:	Charlotte, North Carolina		
Boring No.: Pigg River_B-1	Sample No: S-14	Sample Date:	
Location:	Offset: N/A	Depth (ft): 58.5' to 60.0'	

Type and Specification	*S&ME ID #*	*Cal Date:*	*Type and Specification*	*S&ME ID #*	*Cal Date:*
Balance (0.01 g)	27986	Oct-15	Grooving tool	2	6/21/2016
LL Apparatus	29655	4/4/2016	No. 40 Sieve		
Oven	27179	5/26/2016			

Pan #		Liquid Limit						Plastic Limit		
	Tare #:	T-13	T-92	T-97				A-11	C-23	
A	Tare Weight	27.56	26.42	26.58				4.05	4.21	
B	Wet Soil Weight + A	38.95	37.98	42.80				12.51	12.28	
C	Dry Soil Weight + A	35.44	34.51	38.11				10.09	9.96	
D	Water Weight (B-C)	3.51	3.47	4.69				2.42	2.32	
E	Dry Soil Weight (C-A)	7.88	8.09	11.53				6.04	5.75	
F	% Moisture (D/E)*100	44.5%	42.9%	40.7%				40.1%	40.3%	
N	# OF DROPS	13	19	28				*All Moisture Contents determined by AASHTO T 245*		
LL	LL = **F** * FACTOR									
Ave.	*Average*							**40.2%**		

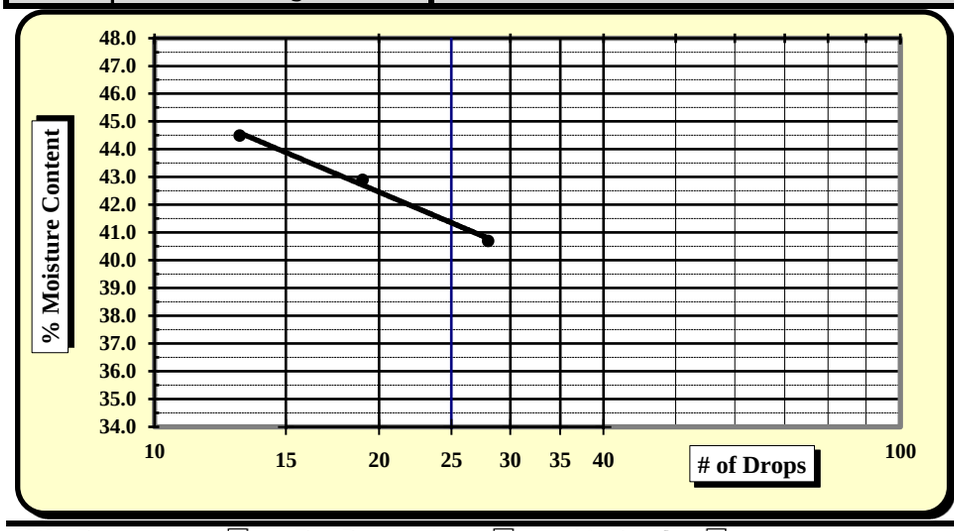

One Point Liquid Limit			
N	**Factor**	**N**	**Factor**
20	0.974	26	1.005
21	0.979	27	1.009
22	0.985	28	1.014
23	0.99	29	1.018
24	0.995	30	1.022
25	1.000		

NP, Non-Plastic ☐
Liquid Limit **41**
Plastic Limit **40**
Plastic Index **1**
Group Symbol **ML**

Multipoint Method ☑
One-point Method ☐

Wet Preparation ☐ Dry Preparation ☑ Air Dried ☑

Notes / Deviations / References: **Group symbol is for minus No. 40 portion only.**

AASHTO T90: Determining the Plastic Limit & Plastic Index of Soils *AASHTO T89: Determining the Liquid Limit of Soils*

Erica Goodyear — *Technician Name*
9/7/2016 — *Date*
Technical Responsibility
Date

This report shall not be reproduced, except in full, without the written approval of S&ME, Inc.

UNCONFINED COMPRESSION
(ASTM D7012 Method C)

S&ME

S&ME, Inc. - Knoxville 1413 Topside Road, Louisville, TN 37777

Project Name: Mountain Valley Pipeline
Project Number: 1358-15-086A

Report Date: September 12, 2016
Reviewed By: Jason B. Burgess

Boring Identification	Depth (ft)	Dimensions, in.		Shape (See Key)	Area (in^2)	Unit Weight (lbs/ft^3)	Loading Rate (psi/sec)	Maximum Load (lbs)	Strength (psi)	Moisture (%)
		Length	Diameter							
Pigg River, B-2	56.7 - 57.6	4.43	1.98	A	3.08	178.9	81	20,590	6,685	0.2
Pigg River, B-2	60.53 - 60.9	4.36	1.98	B	3.08	170.0	82	30,650	9,951	0.0
Pigg River, B-3	99.8 - 100.75	4.36	1.98	A	3.08	190.6	76	20,560	6,675	0.3
Pigg River, B-3	105.9 - 106.85	4.37	1.98	A	3.08	174.9	87	14,680	4,766	0.2
Pigg River, B-3	114.8 - 115.2	4.15	1.97	B	3.05	168.7	86	8,620	2,826	0.8

NOTES: Effective (as received) unit weight as determined by RTH 109-93.
Loading rates were selected to target reaching failure between 2 and 15 minutes.

SHAPE KEY

ASTM D4543-08 *Standard Practice for Preparing Rock Core as Cylindrical Test Specimens and Verifying Conformance to Dimensional and Shape Tolerance* Section 1.2 - "Rock is a complex engineering material that can vary greatly as a function of lithology, stress history, weathering, moisture content and chemistry, and other natural geologic processes. As such, it is not always possible to obtain or prepare rock core specimens that satisfy the desirable tolerances given in this practice. Most commonly, this situation presents itself with weaker, more porous, and poorly cemented rock types and rock types containing significant or weak (or both) structural features. For these and other rock types which are difficult to prepare, all reasonable efforts shall be made to prepare a specimen in accordance with this practice and for the intended test procedure. However, when it has been determined by trial that this is not possible, prepare the rock specimen to the closest tolerances practicable and consider this to be the best effort and report it as such and if allowable or necessary for the intended test, capping the ends of the specimen as discussed in this practice is permitted."

A Test specimen measurements met the desired shape tolerances of ASTM D4543-08 (side straightness, end flatness & parallelism, and end perpendicularity to axis)

B Test specimen measurements met the desired shape tolerances of ASTM D4543-08 for end flatness & parallelism, and end perpendicularity to axis. Specimen did not meet the desired tolerance for side straightness. Specimen prepared to closest tolerances practicable.

C Test specimen measurements met the desired shape tolerances of ASTM D4543-08 for end flatness & parallelism. Specimen did not meet the desired tolerances for side straightness and end perpendicularity to axis. Specimen prepared to closest tolerances practicable.

D Test specimen measurements met the desired shape tolerances of ASTM D4543-08 for end flatness. Specimen did not meet the desired tolerances for side straightness, parallelism and end perpendicularity to axis. Specimen prepared to closest tolerances practicable.

E Test specimen measurements met the desired shape tolerances of ASTM D4543-08 for end flatness and end perpendicularity to axis. Specimen did not meet the desired tolerance for side straightness and parallelism. Specimen prepared to closest tolerances practicable.

PREPARING ROCK CORES AS CYLINDRICAL TEST SPECIMENS AND VERIFY CONFORMANCE OF DIMENSIONAL AND SHAPE TOLERANCES (ASTM D4543)

S&ME

1413 Topside Road, Louisville, TN 37777

Project:	Mountain Valley Pipeline	**Diameter (in):**	1.98	**Date:**	9/8/2016
Project No.:	1358-15-086A	**Length (in):**	4.43	**Tested by:**	TJW
Boring Id:	Pigg River, B-2	**Unit Weight (pcf):**	178.9	**Reviewed by:**	JBB
Sample No.:	N/A	**Moisture Content (%):**	0.2		
Depth (ft):	56.7 - 57.6				

Deviation From Straightness (Procedure S1)

Is the maximum gap ≤ 0.02 in.? **YES** Straightness Tolerance Met? **YES**

End Flatness and Parallelism Readings (Procedure FP1)

Position	End 1	End 1(90)	End 2	End 2(90)
- 7/8	-0.0015	0.0000	-0.0028	0.0000
- 6/8	-0.0014	0.0000	-0.0028	0.0000
- 5/8	-0.0009	0.0000	-0.0022	0.0000
- 4/8	-0.0006	0.0000	-0.0016	0.0000
- 3/8	-0.0002	0.0000	-0.0012	0.0000
- 2/8	0.0000	0.0000	-0.0010	0.0000
- 1/8	0.0000	0.0000	-0.0005	0.0000
0	0.0000	0.0000	0.0000	0.0000
1/8	0.0000	-0.0002	0.0000	0.0000
2/8	0.0000	-0.0002	0.0000	0.0000
3/8	0.0000	-0.0002	0.0000	0.0000
4/8	0.0000	-0.0002	0.0000	0.0000
5/8	0.0000	-0.0002	0.0000	0.0000
6/8	0.0000	-0.0002	0.0003	0.0000
7/8	0.0000	-0.0002	0.0011	0.0000

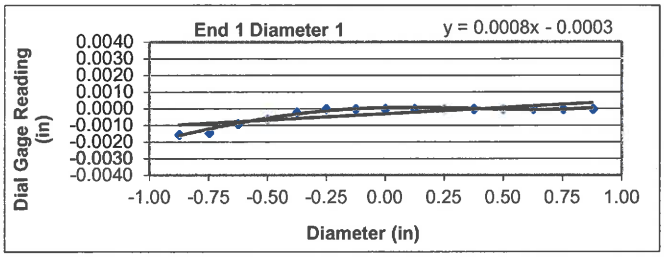

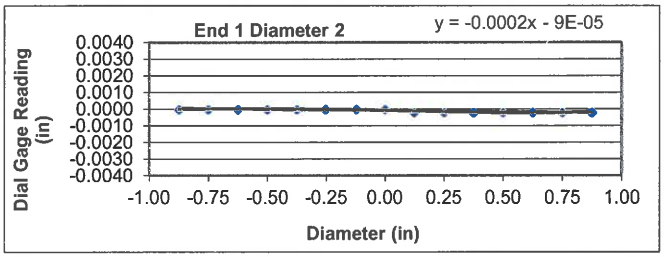

Flatness is met when the difference at any point between a smooth curve drawn through points and a visual best fit line is ≤ 0.001 in.

Flatness Tolerance Met? **YES**

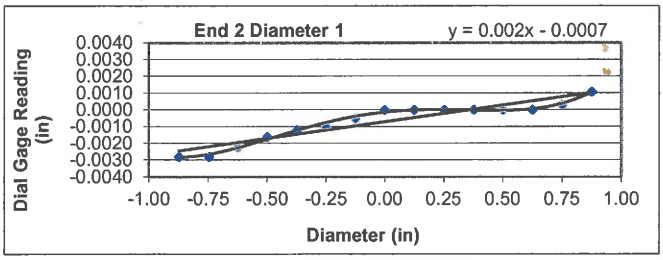

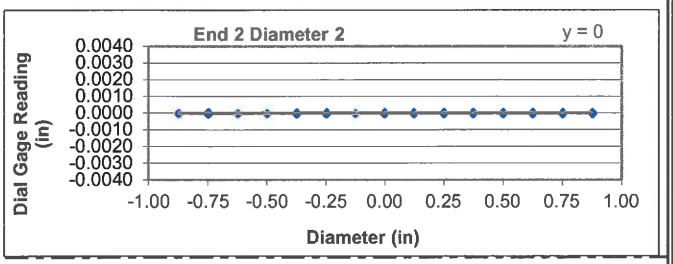

Parallelism is met when the angular difference between best fit lines on opposing ends is ≤ 0.25°.

Parrallelism Diameter 1

End 1:	Slope of Best Fit Line:	0.00075
	Angle of Best Fit Line:	0.04322
End 2:	Slope of Best Fit Line:	0.00198
	Angle of Best Fit Line:	0.11361
	Max Angular Difference:	**-0.07**

Parrallelism Diameter 2

End 1:	Slope of Best Fit Line:	-0.00016
	Angle of Best Fit Line:	-0.00917
End 2:	Slope of Best Fit Line:	0.00000
	Angle of Best Fit Line:	0.00000
	Max Angular Difference:	**-0.01**

Parallelism Tolerance Met? **YES**

Perpendicularity (Procedure P1) is met when the difference between max and min readings along each line divided by the diameter is ≤ 0.0043.

	Difference b/w max & min	Divide by Diameter	Meets Tolerance
End 1 Diam 1	0.0015	0.0008	**YES**
End 1 Diam 2	0.0002	0.0001	**YES**
End 2 Diam 1	0.0039	0.0020	**YES**
End 2 Diam 2	0.0000	0.0000	**YES**

Perpendicularity Tolerance Met? **YES**

PREPARING ROCK CORES AS CYLINDRICAL TEST SPECIMENS AND VERIFY CONFORMANCE OF DIMENSIONAL AND SHAPE TOLERANCES (ASTM D4543)

S&ME

1413 Topside Road, Louisville, TN 37777

Project:	Mountain Valley Pipeline	**Diameter (in):**	1.98	**Date:**	9/8/2016
Project No.:	1358-15-086A	**Length (in):**	4.36	**Tested by:**	TJW
Boring Id:	Pigg River, B-2	**Unit Weight (pcf):**	170.0	**Reviewed by:**	JBB
Sample No.:	N/A	**Moisture Content (%):**	0.0		
Depth (ft):	60.53 - 60.9				

Deviation From Straightness (Procedure S1)

Is the maximum gap ≤ 0.02 in.? **NO** Straightness Tolerance Met? **NO**

End Flatness and Parallelism Readings (Procedure FP1)

Position	End 1	End 1(90)	End 2	End 2(90)
- 7/8	0.0033	0.0000	0.0030	0.0010
- 6/8	0.0023	0.0000	0.0023	0.0008
- 5/8	0.0016	0.0000	0.0019	0.0005
- 4/8	0.0009	0.0000	0.0011	0.0002
- 3/8	0.0004	0.0000	0.0007	0.0000
- 2/8	0.0000	0.0000	0.0001	0.0000
- 1/8	0.0000	0.0000	0.0000	0.0000
0	0.0000	0.0000	0.0000	0.0000
1/8	0.0000	0.0000	0.0000	-0.0004
2/8	0.0000	0.0000	-0.0004	-0.0011
3/8	0.0000	0.0000	-0.0011	-0.0012
4/8	-0.0005	0.0000	-0.0019	-0.0016
5/8	-0.0014	0.0000	-0.0026	-0.0017
6/8	-0.0020	0.0000	-0.0035	-0.0023
7/8	-0.0029	0.0000	-0.0042	-0.0023

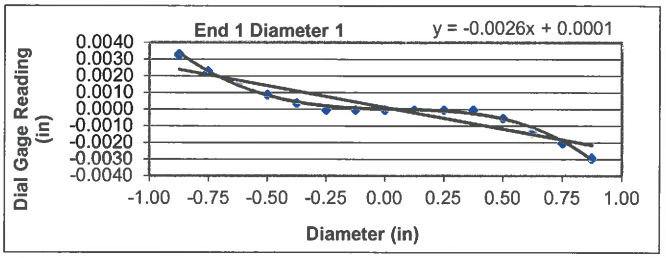

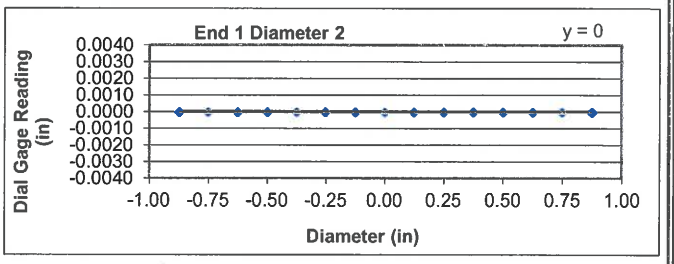

Flatness is met when the difference at any point between a smooth curve drawn through points and a visual best fit line is ≤ 0.001 in.

Flatness Tolerance Met? **YES**

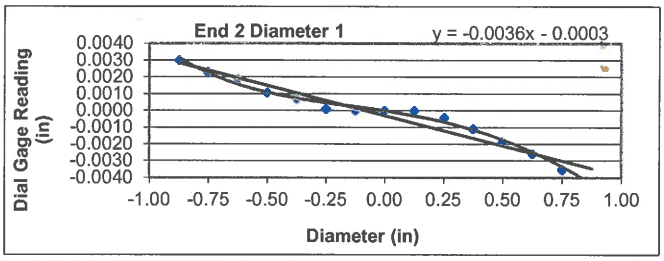

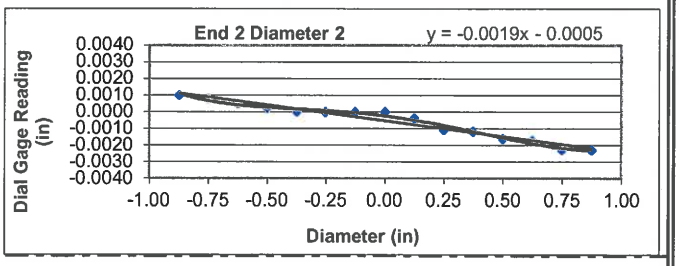

Parallelism is met when the angular difference between best fit lines on opposing ends is ≤ 0.25°.

Parrallelism Diameter 1

End 1:	Slope of Best Fit Line:	-0.00260
	Angle of Best Fit Line:	-0.14897
End 2:	Slope of Best Fit Line:	-0.00360
	Angle of Best Fit Line:	-0.20643
	Max Angular Difference:	**0.06**

Parrallelism Diameter 2

End 1:	Slope of Best Fit Line:	0.00000
	Angle of Best Fit Line:	0.00000
End 2:	Slope of Best Fit Line:	-0.00189
	Angle of Best Fit Line:	-0.10821
	Max Angular Difference:	**0.11**

Parallelism Tolerance Met? **YES**

Perpendicularity (Procedure P1) is met when the difference between max and min readings along each line divided by the diameter is ≤ 0.0043.

	Difference b/w max & min	Divide by Diameter	Meets Tolerance
End 1 Diam 1	0.0062	0.0031	**YES**
End 1 Diam 2	0.0000	0.0000	**YES**
End 2 Diam 1	0.0072	0.0036	**YES**
End 2 Diam 2	0.0033	0.0017	**YES**

Perpendicularity Tolerance Met? **YES**

PREPARING ROCK CORES AS CYLINDRICAL TEST SPECIMENS AND VERIFY CONFORMANCE OF DIMENSIONAL AND SHAPE TOLERANCES (ASTM D4543)

S&ME

1413 Topside Road, Louisville, TN 37777

Project:	Mountain Valley Pipeline	**Diameter (in):**	1.98	**Date:**	9/8/2016
Project No.:	1358-15-086A	**Length (in):**	4.36	**Tested by:**	TJW
Boring Id:	Pigg River, B-3	**Unit Weight (pcf):**	190.6	**Reviewed by:**	JBB
Sample No.:	N/A	**Moisture Content (%):**	0.3		
Depth (ft):	99.8 - 100.75				

Deviation From Straightness (Procedure S1)

Is the maximum gap ≤ 0.02 in.? **YES** Straightness Tolerance Met? **YES**

End Flatness and Parallelism Readings (Procedure FP1)

Position	End 1	End 1(90)	End 2	End 2(90)
- 7/8	0.0008	-0.0034	-0.0019	-0.0019
- 6/8	0.0008	-0.0028	-0.0017	-0.0013
- 5/8	0.0008	-0.0021	-0.0017	-0.0012
- 4/8	0.0008	-0.0017	-0.0017	-0.0009
- 3/8	0.0008	-0.0012	-0.0016	-0.0003
- 2/8	0.0003	-0.0005	-0.0013	0.0000
- 1/8	0.0000	0.0000	-0.0004	0.0000
0	0.0000	0.0000	0.0000	0.0000
1/8	0.0000	0.0000	0.0000	0.0000
2/8	0.0000	0.0000	0.0000	0.0000
3/8	0.0000	0.0001	0.0000	0.0000
4/8	0.0000	0.0010	0.0000	0.0003
5/8	0.0000	0.0015	0.0000	0.0006
6/8	0.0000	0.0022	0.0000	0.0011
7/8	0.0000	0.0028	0.0001	0.0015

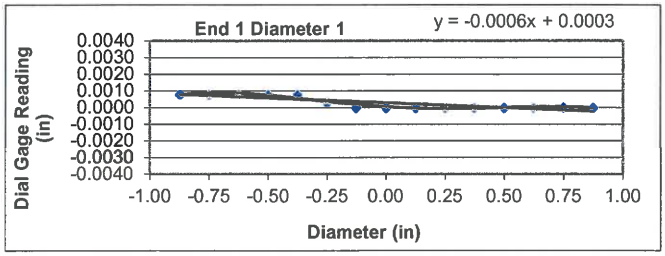

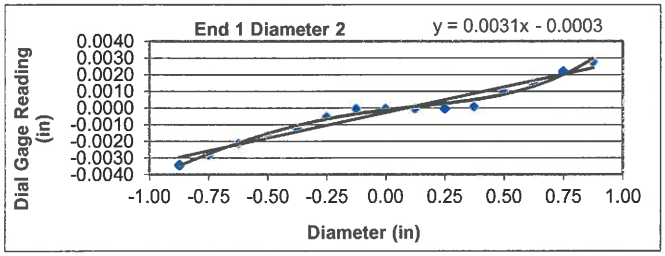

Flatness is met when the difference at any point between a smooth curve drawn through points and a visual best fit line is ≤ 0.001 in.

Flatness Tolerance Met? **YES**

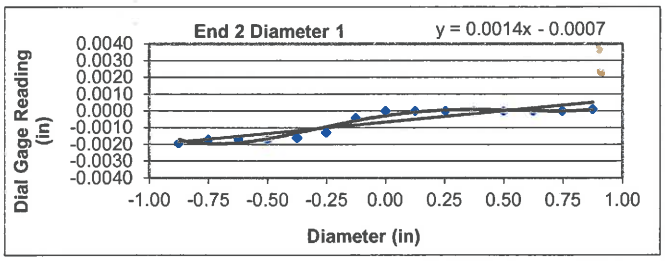

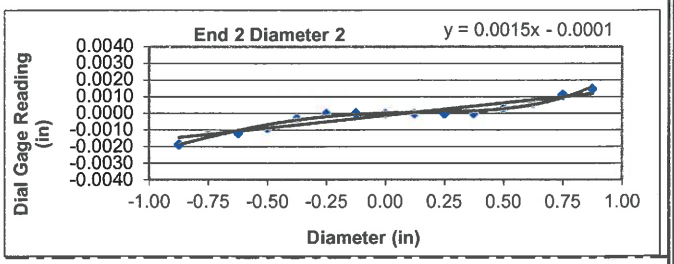

Parallelism is met when the angular difference between best fit lines on opposing ends is ≤ 0.25°.

Parrallelism Diameter 1

End 1:	Slope of Best Fit Line:	-0.00059
	Angle of Best Fit Line:	-0.03372
End 2:	Slope of Best Fit Line:	0.00135
	Angle of Best Fit Line:	0.07743
	Max Angular Difference:	**-0.11**

Parrallelism Diameter 2

End 1:	Slope of Best Fit Line:	0.00306
	Angle of Best Fit Line:	0.17533
End 2:	Slope of Best Fit Line:	0.00151
	Angle of Best Fit Line:	0.08660
	Max Angular Difference:	**0.09**

Parallelism Tolerance Met? **YES**

Perpendicularity (Procedure P1) is met when the difference between max and min readings along each line divided by the diameter is ≤ 0.0043.

	Difference b/w max & min	Divide by Diameter	Meets Tolerance
End 1 Diam 1	0.0008	0.0004	**YES**
End 1 Diam 2	0.0062	0.0031	**YES**
End 2 Diam 1	0.0020	0.0010	**YES**
End 2 Diam 2	0.0034	0.0017	**YES**

Perpendicularity Tolerance Met? **YES**

PREPARING ROCK CORES AS CYLINDRICAL TEST SPECIMENS AND VERIFY CONFORMANCE OF DIMENSIONAL AND SHAPE TOLERANCES (ASTM D4543)

S&ME

1413 Topside Road, Louisville, TN 37777

Project:	Mountain Valley Pipeline	**Diameter (in):**	1.98	**Date:**	9/8/2016
Project No.:	1358-15-086A	**Length (in):**	4.37	**Tested by:**	TJW
Boring Id:	Pigg River, B-3	**Unit Weight (pcf):**	174.9	**Reviewed by:**	JBB
Sample No.:	N/A	**Moisture Content (%):**	0.2		
Depth (ft):	105.9 - 106.85				

Deviation From Straightness (Procedure S1)

Is the maximum gap ≤ 0.02 in.? **YES** Straightness Tolerance Met? **YES**

End Flatness and Parallelism Readings (Procedure FP1)

Position	End 1	End 1(90)	End 2	End 2(90)
- 7/8	0.0016	-0.0022	-0.0027	-0.0006
- 6/8	0.0009	-0.0020	-0.0025	-0.0003
- 5/8	0.0003	-0.0013	-0.0022	0.0000
- 4/8	0.0000	-0.0005	-0.0020	0.0000
- 3/8	0.0000	0.0000	-0.0017	0.0000
- 2/8	0.0000	0.0000	-0.0010	0.0000
- 1/8	0.0000	0.0000	-0.0004	0.0000
0	0.0000	0.0000	0.0000	0.0000
1/8	0.0000	0.0000	0.0000	0.0000
2/8	0.0000	0.0000	0.0000	0.0000
3/8	-0.0003	0.0000	0.0000	0.0000
4/8	-0.0006	0.0000	0.0000	0.0000
5/8	-0.0010	0.0003	0.0000	0.0002
6/8	-0.0019	0.0006	0.0000	0.0005
7/8	-0.0024	0.0012	0.0000	0.0008

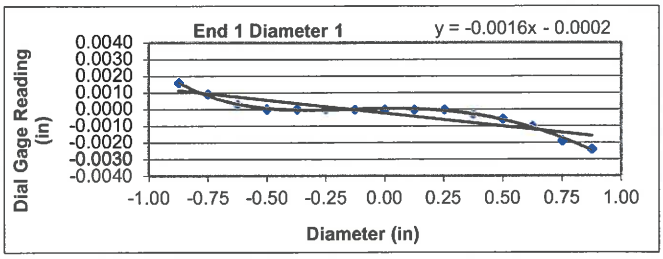

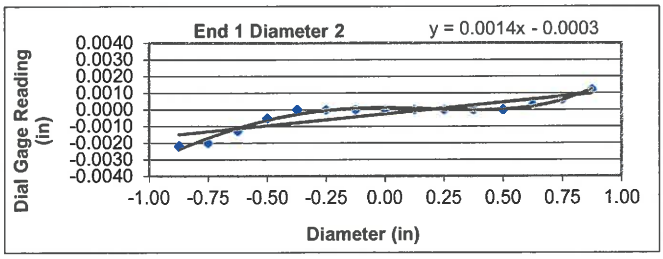

Flatness is met when the difference at any point between a smooth curve drawn through points and a visual best fit line is ≤ 0.001 in.

Flatness Tolerance Met? **YES**

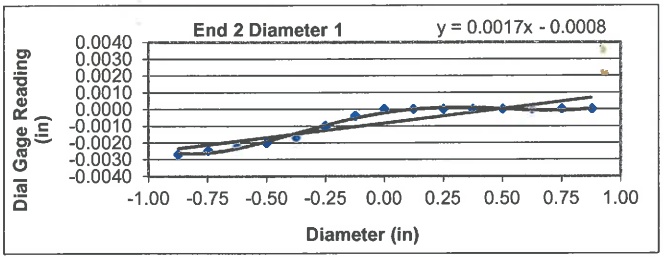

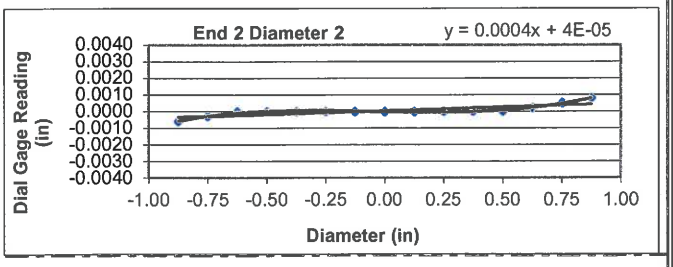

Parallelism is met when the angular difference between best fit lines on opposing ends is ≤ 0.25°.

Parrallelism Diameter 1

End 1:	Slope of Best Fit Line:	-0.00156
	Angle of Best Fit Line:	-0.08938
End 2:	Slope of Best Fit Line:	0.00173
	Angle of Best Fit Line:	0.09888
	Max Angular Difference:	**-0.19**

Parrallelism Diameter 2

End 1:	Slope of Best Fit Line:	0.00141
	Angle of Best Fit Line:	0.08087
End 2:	Slope of Best Fit Line:	0.00045
	Angle of Best Fit Line:	0.02554
	Max Angular Difference:	**0.06**

Parallelism Tolerance Met? **YES**

Perpendicularity (Procedure P1) is met when the difference between max and min readings along each line divided by the diameter is ≤ 0.0043.

	Difference b/w max & min	Divide by Diameter	Meets Tolerance
End 1 Diam 1	0.0040	0.0020	**YES**
End 1 Diam 2	0.0034	0.0017	**YES**
End 2 Diam 1	0.0027	0.0014	**YES**
End 2 Diam 2	0.0014	0.0007	**YES**

Perpendicularity Tolerance Met? **YES**

PREPARING ROCK CORES AS CYLINDRICAL TEST SPECIMENS AND VERIFY CONFORMANCE OF DIMENSIONAL AND SHAPE TOLERANCES (ASTM D4543)

S&ME

1413 Topside Road, Louisville, TN 37777

Project:	Mountain Valley Pipeline	**Diameter (in):**	1.97	**Date:**	9/8/2016
Project No.:	1358-15-086A	**Length (in):**	4.15	**Tested by:**	TJW
Boring Id:	Pigg River, B-3	**Unit Weight (pcf):**	168.7	**Reviewed by:**	JBB
Sample No.:	N/A	**Moisture Content (%):**	0.8		
Depth (ft):	114.8 - 115.2				

Deviation From Straightness (Procedure S1)

Is the maximum gap ≤ 0.02 in.? **NO** Straightness Tolerance Met? **NO**

End Flatness and Parallelism Readings (Procedure FP1)

Position	End 1	End 1(90)	End 2	End 2(90)
- 7/8	0.0000	0.0007	-0.0006	0.0025
- 6/8	0.0000	0.0005	-0.0006	0.0019
- 5/8	0.0000	0.0003	-0.0004	0.0011
- 4/8	0.0000	0.0000	-0.0003	0.0009
- 3/8	0.0000	0.0000	-0.0001	0.0004
- 2/8	0.0000	0.0000	0.0000	0.0000
- 1/8	0.0000	0.0000	0.0000	0.0000
0	0.0000	0.0000	0.0000	0.0000
1/8	-0.0004	-0.0004	0.0000	-0.0004
2/8	-0.0010	-0.0012	0.0000	-0.0011
3/8	-0.0016	-0.0017	0.0000	-0.0019
4/8	-0.0016	-0.0021	0.0000	-0.0024
5/8	-0.0016	-0.0021	0.0000	-0.0027
6/8	-0.0022	-0.0024	0.0000	-0.0035
7/8	-0.0022	-0.0027	0.0000	-0.0042

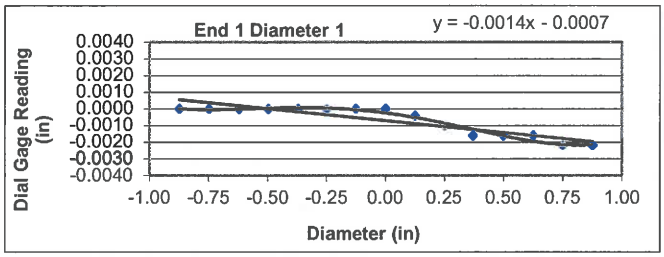

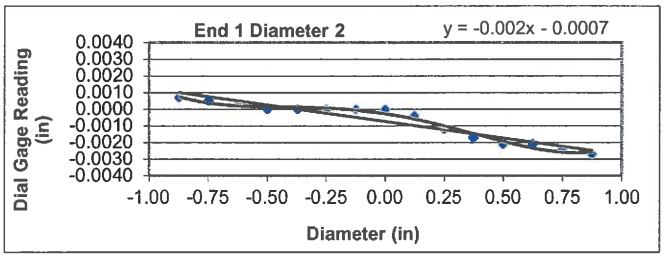

Flatness is met when the difference at any point between a smooth curve drawn through points and a visual best fit line is ≤ 0.001 in.

Flatness Tolerance Met? **YES**

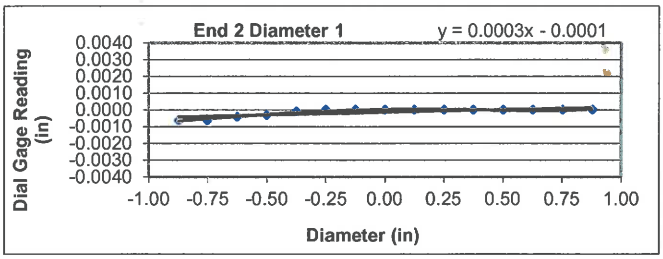

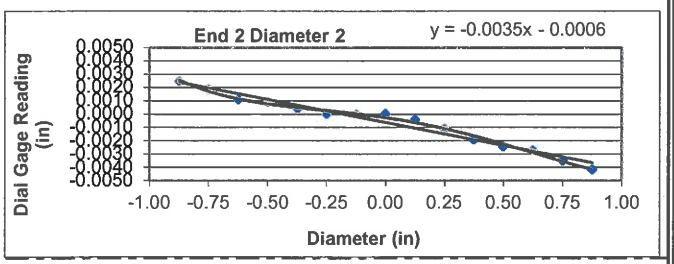

Parallelism is met when the angular difference between best fit lines on opposing ends is ≤ 0.25°.

Parrallelism Diameter 1

End 1:	Slope of Best Fit Line:	-0.00143
	Angle of Best Fit Line:	-0.08218
End 2:	Slope of Best Fit Line:	0.00032
	Angle of Best Fit Line:	0.01850
	Max Angular Difference:	**-0.10**

Parrallelism Diameter 2

End 1:	Slope of Best Fit Line:	-0.00199
	Angle of Best Fit Line:	-0.11377
End 2:	Slope of Best Fit Line:	-0.00346
	Angle of Best Fit Line:	-0.19808
	Max Angular Difference:	**0.08**

Parallelism Tolerance Met? **YES**

Perpendicularity (Procedure P1) is met when the difference between max and min readings along each line divided by the diameter is ≤ 0.0043.

	Difference b/w max & min	Divide by Diameter	Meets Tolerance
End 1 Diam 1	0.0022	0.0011	**YES**
End 1 Diam 2	0.0034	0.0017	**YES**
End 2 Diam 1	0.0006	0.0003	**YES**
End 2 Diam 2	0.0067	0.0034	**YES**

Perpendicularity Tolerance Met? **YES**

S&ME
1413 Topside Road
Louisville, TN 37777

1	**Specimen ID**	Pigg River, B-2 (56.7' – 57.6')
	Remarks	Unconfined Compression of Rock Specimen Before/After Test (ASTM D7012, Method C)

2	**Specimen ID**	Pigg River, B-2 (60.53' – 60.9')
	Remarks	Unconfined Compression of Rock Specimen Before/After Test (ASTM D7012, Method C)

S&ME
1413 Topside Road
Louisville, TN 37777

3	**Specimen ID**	Pigg River, B-3 (99.8' – 100.75')
	Remarks	Unconfined Compression of Rock Specimen Before/After Test (ASTM D7012, Method C)

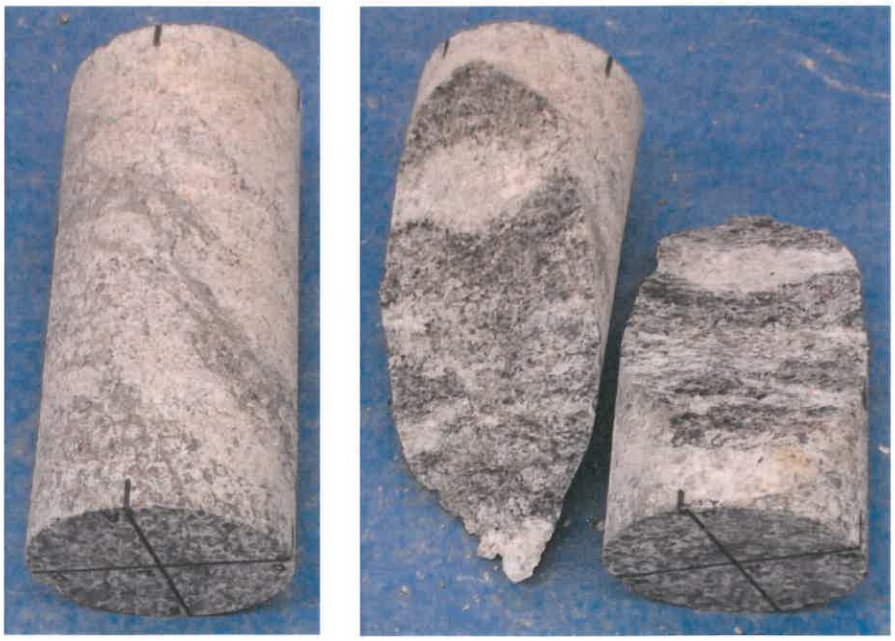

4	**Specimen ID**	Pigg River, B-3 (105.9' – 106.85')
	Remarks	Unconfined Compression of Rock Specimen Before/After Test (ASTM D7012, Method C)

S&ME
1413 Topside Road
Louisville, TN 37777

5	**Specimen ID**	Pigg River, B-3 (114.8' – 115.2')
	Remarks	Unconfined Compression of Rock Specimen Before/After Test (ASTM D7012, Method C)

Responses to Data Requests

Attachment DR3 Water Resources-10b

1 Pigg River Alternative Alignment HDD

This crossing spans the Pigg River in Pittsylvania County, Virginia. The crossing along the existing alignment is approximately 710-feet from PI to PI with an elevation change of 136-feet. An HDD is not a feasible crossing method within the existing alignment, as the straight section is not long enough for an HDD between PI's. RK&K was tasked with looking for an alternative alignment with an exit point in the vicinity of MP 288.93 (October 2016 Proposed Route) that could feasibly accommodate an HDD.

1.1 Alternative Alignment Crossing

An alternative alignment crossing was identified that is approximately 3,500-feet from PI to PI, with an elevation change of 161-feet. An HDD is a feasible crossing method within this alternative alignment. We based our analysis on a bend radius of 4,200-feet, an entry angle of 12 degrees and an exit angle of 6 degrees. The alternative alignment would depart from MVP's existing alignment at a PI at approximately MP 288.25 and continue east for another 3,417-feet before rejoining MVP's October 2016 Proposed Route at approximately MP 288.93.

1.2 Site Geology

The Pigg River crossing is located in the Western Piedmont physiographic province. The geology is characterized primarily by mica schist and gneiss, with occurrences of quartzite and melange. The overall formation is the Fork Mountain group with the Madison soil series at the near surface. Negligible river terrace deposits have been reported in soils overlying rock in this area. Materials requiring rock drilling techniques to penetrate are present at this site.

Our geotechnical analysis of the area showed a top layer of clay, silty clay or sand followed by partially weathered rock or rock. The rock is found at elevations of approximately 680 feet to 690 feet at the entry and exit sides and at elevations of approximately 640 feet closer to the river. Three soil borings were performed in the vicinity of this crossing and geological hazards to HDDs were not encountered in any of them. Rock or partially weathered rock was encountered in all three borings, indicating that rock drilling techniques will be needed if an HDD is performed at this site.

1.3 HDD

Utilizing the proposed alternate alignment, an HDD beneath the Pigg River would be about 3,417-feet in length. This analysis is based on a bend radius of 4,200-feet, an entry angle of 12 degrees and an exit angle of 6 degrees. Entry approximately at the PI at MP 288.25, produces an exit point back on MVP's October 2016 Proposed Route at approximately at MP 288.93. This HDD is also based on a proposed pipe depth of 52 feet below the bottom of the river, and an exit point west of Highway 750.

The 42-inch pipeline will require a large borehole, approximately 54-inches in diameter. A maxi drill rig will be required to perform this HDD, with a typical workspace of 150 feet by 250 feet. Adequate space is found at the proposed HDD entry point at the PI at MP 288.25 to accommodate a maxi rig. The area is currently wooded and will need to be

cleared prior to construction. In analyzing the exit side for HDD construction, fabrication and pullback of the pipe in one continuous pullback is the preferred method. However, depending on subsurface conditions, it is feasible to pullback the pipe in multiple sections. With this method the pullback is stopped and each section is welded before pulling into the hole. It is our understanding that during construction, Highway 750 can be blocked temporarily to facilitate pipe pullback and there is an open field to the east of the highway giving a potential pullback space of approximately 1,800 feet. If this site can be utilized as temporary workspace for fabrication and pullback, then the pullback operation can be accomplished in two sections with one weld.

RIGHT-OF-WAY □
OWNERSHIP DATA

DESIGN
- PIPE □COATING
- SLOPE DISTANCE
- CLASS LOCATION □HCA

ENVIRONMENTAL
- CONSTRUCTION EXCLUSION
- WETLAND □STREAM
- SEDIMENT BARRIER LEFT
- SEDIMENT BARRIER RIGHT

PRELIMINARY

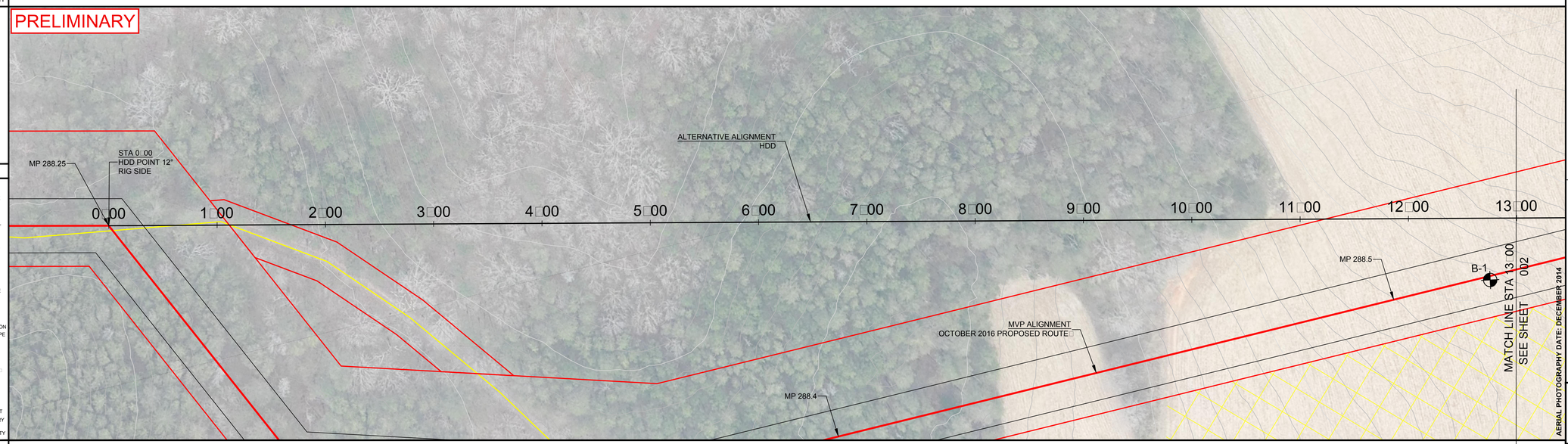

PLAN VIEW

LEGEND
- PROPOSED 42"PIPELINE
- NON-SURVEYED C/L
- 500□TICK MARK
- EXISTING PIPELINE
- PERMANENT EASEMENT
- WORK SPACE LIMITS
- PERMANENT ACCESS RD
- TEMPORARY ACCESS RD
- ANCILLARY SITE
- PROPERTY LINE
- ROAD RIGHT-OF-WAY
- FENCE LINE
- OVERHEAD POWER
- OVERHEAD TELEPHONE
- C/L ROAD
- C/L RAILROAD
- DELINEATED STREAM
- DELINEATED WETLAND
- PROPOSED TEST STATION
- LINE MARKER - VENT PIPE
- POWER-TELE POLE
- TOWER LEG
- GUY ANCHOR
- GAS VALVE
- WELL - GAS□OIL□WATER□MONITORING
- POST - GATE□FENCE
- ELEC GAS WTR METER
- PEDESTAL - UTILITY
- MH - SANITARY WATER
- CATCH BASIN - CULVERT
- ADDITIONAL TEMPORARY WORK SPACE□ATWS□
- ABOVE GROUND FACILITY

PI SYMBOL
MAILBOX
SIGN
TREE
TANK

REFERENCE DRAWINGS

DRAWING NO.	DESCRIPTION

WORK SPACE
- PROPOSED PIPELINE
- EXISTING PIPELINE
- WORK SPACE LIMITS
- PERMANENT EASEMENT
- TEMPORARY WORK SPACE□TWS□
- ADD. TEMPORARY WORK SPACE ATWS□

CONSTRUCTION METHOD

CONSTRUCTION METHOD KEY
1 -
2 -
3 -
4 -
5 -
6 -
7 -
8 -
9 -
10 -
11 -
12 -
13 -
14 -
15 -
16 -

PROFILE

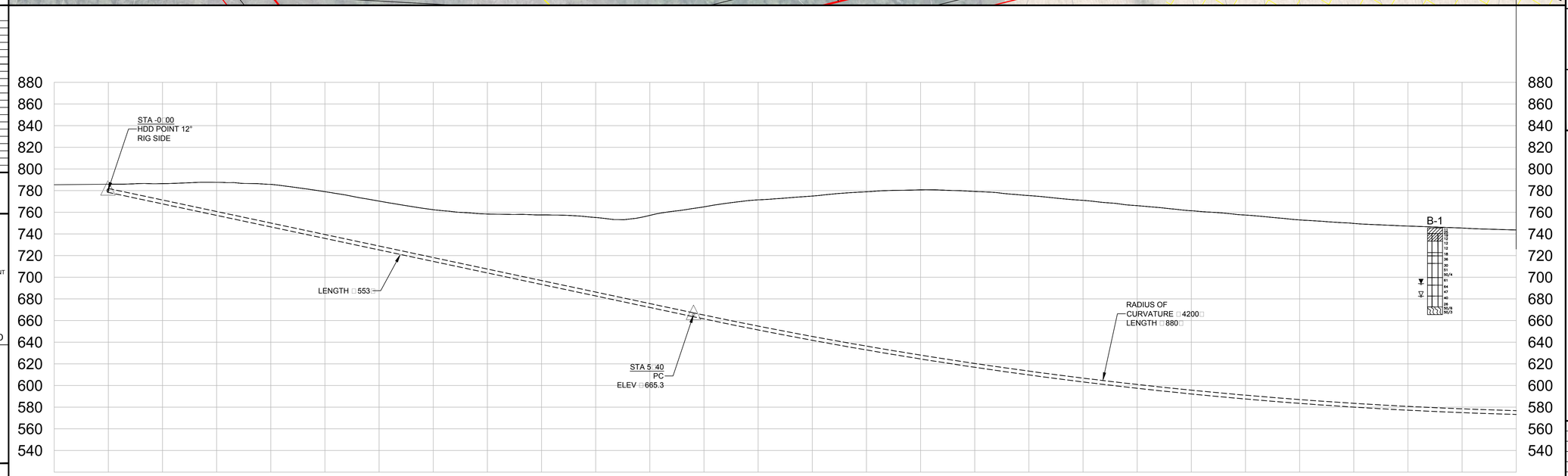

PIGG RIVER ALTERNATIVE ALIGNMENT - HDD

REVISIONS

REV.	BY	DATE	DESCRIPTION
-			

MATERIAL SUMMARY

MK. NO.	QTY.	DESCRIPTION

AERIAL PHOTOGRAPHY DATE: DECEMBER 2014

APPROVED FOR CONSTRUCTION

REV.	BY	DATE
-		

APPROVED FOR BIDDING

REV.	BY	DATE
-		

APPROVED FOR FERC

REV.	BY	DATE
0	-	-

Mountain Valley PIPELINE

PIPELINE ALIGNMENT
MOUNTAIN VALLEY PROJECT - H600 LINE
PITTSYLVANIA CO., VA.

HOR□: SCALE: 1" = NTS	
DRAWN BY: HEI DRF□	9/14/2016
DRAFTING CK:	
ENGINEERING CK:	
CONSTRUCTION CK:	
ENVIRONMENTAL CK:	
AFE/P.O.NO.:	
HEI PROJECT NO.: 14-10-052	
DRAWING NO.: **PA-GIVA-H600**	
SHEET XX OF XX	REV. -
DATE OF PLOT: 10/7/2016 9:05:19 AM	

RIGHT-OF-WAY □
OWNERSHIP DATA

DESIGN
- PIPE □COATING
- SLOPE DISTANCE
- CLASS LOCATION □HCA

ENVIRONMENTAL
- CONSTRUCTION EXCLUSION
- WETLAND □STREAM
- SEDIMENT BARRIER LEFT
- SEDIMENT BARRIER RIGHT

PRELIMINARY

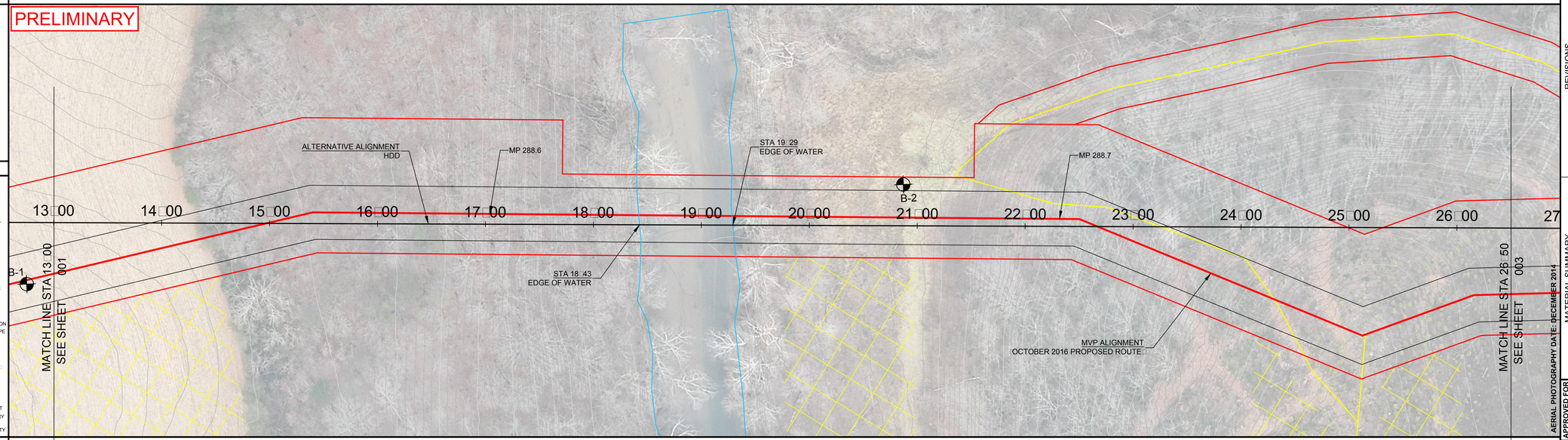

PLAN VIEW

LEGEND
- PROPOSED 42"PIPELINE
- NON-SURVEYED C/L
- 500□TICK MARK
- EXISTING PIPELINE
- PERMANENT EASEMENT
- WORK SPACE LIMITS
- PERMANENT ACCESS RD
- TEMPORARY ACCESS RD
- ANCILLARY SITE
- PROPERTY LINE
- ROAD RIGHT-OF-WAY
- FENCE LINE
- OVERHEAD POWER
- OVERHEAD TELEPHONE
- C/L ROAD
- C/L RAILROAD
- DELINEATED STREAM
- DELINEATED WETLAND
- PI SYMBOL
- PROPOSED TEST STATION
- MAILBOX
- LINE MARKER - VENT PIPE
- POWER-TELE POLE
- SIGN
- TOWER LEG
- TREE
- GUY ANCHOR
- TANK
- GAS VALVE
- WELL - GAS OIL WATER□MONITORING
- POST - GATE FENCE
- ELEC GAS WTR METER
- PEDESTAL - UTILITY
- MH - SANITARY WATER
- CATCH BASIN - CULVERT
- ADDITIONAL TEMPORARY WORK SPACE ATWS□
- ABOVE GROUND FACILITY

REFERENCE DRAWINGS

DRAWING NO.	DESCRIPTION

WORK SPACE
- PROPOSED PIPELINE
- EXISTING PIPELINE
- WORK SPACE LIMITS
- PERMANENT EASEMENT
- TEMPORARY WORK SPACE TWS□
- ADD. TEMPORARY WORK SPACE ATWS□

CONSTRUCTION METHOD

CONSTRUCTION METHOD KEY
1 -
2 -
3 -
4 -
5 -
6 -
7 -
8 -
9 -
10 -
11 -
12 -
13 -
14 -
15 -
16 -

PROFILE

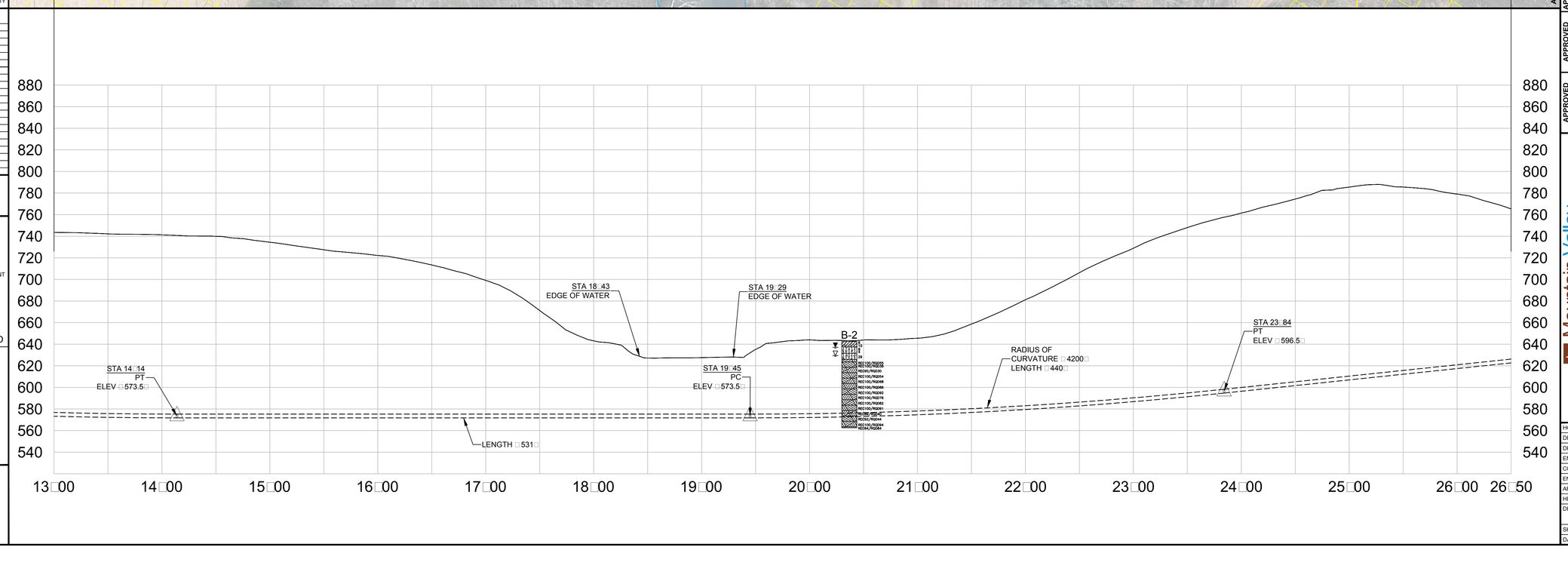

PIGG RIVER ALTERNATIVE ALIGNMENT - HDD

REVISIONS

MK. NO.	DESCRIPTION	QTY.	DATE	BY

MATERIAL SUMMARY

MK. NO.	DESCRIPTION	QTY.	DATE	BY

AERIAL PHOTOGRAPHY DATE: DECEMBER 2014

APPROVED FOR CONSTRUCTION

REV.	BY	DATE
-	-	-

APPROVED FOR BIDDING

REV.	BY	DATE
-	-	-

APPROVED FOR FERC

REV.	BY	DATE
0	-	-

Mountain Valley PIPELINE

PIPELINE ALIGNMENT
MOUNTAIN VALLEY PROJECT - H600 LINE
PITTSYLVANIA CO., VA.

HOR.□SCALE: 1" □NTS	
DRAWN BY: HEI DRF□	9.14.2016
DRAFTING CK:	
ENGINEERING CK:	
CONSTRUCTION CK:	
ENVIRONMENTAL CK:	
AFE P.O.NO.:	
HEI PROJECT NO.: 14-10-052	
DRAWING NO.: PA-GIVA-H600	
SHEET XX OF XX	REV.□
DATE OF PLOT: 10.7.2016 9:08:10 AM	

RIGHT-OF-WAY □
OWNERSHIP DATA

DESIGN
- PIPE □COATING
- SLOPE DISTANCE
- CLASS LOCATION □HCA

ENVIRONMENTAL
- CONSTRUCTION EXCLUSION
- WETLAND □STREAM
- SEDIMENT BARRIER LEFT
- SEDIMENT BARRIER RIGHT

PRELIMINARY

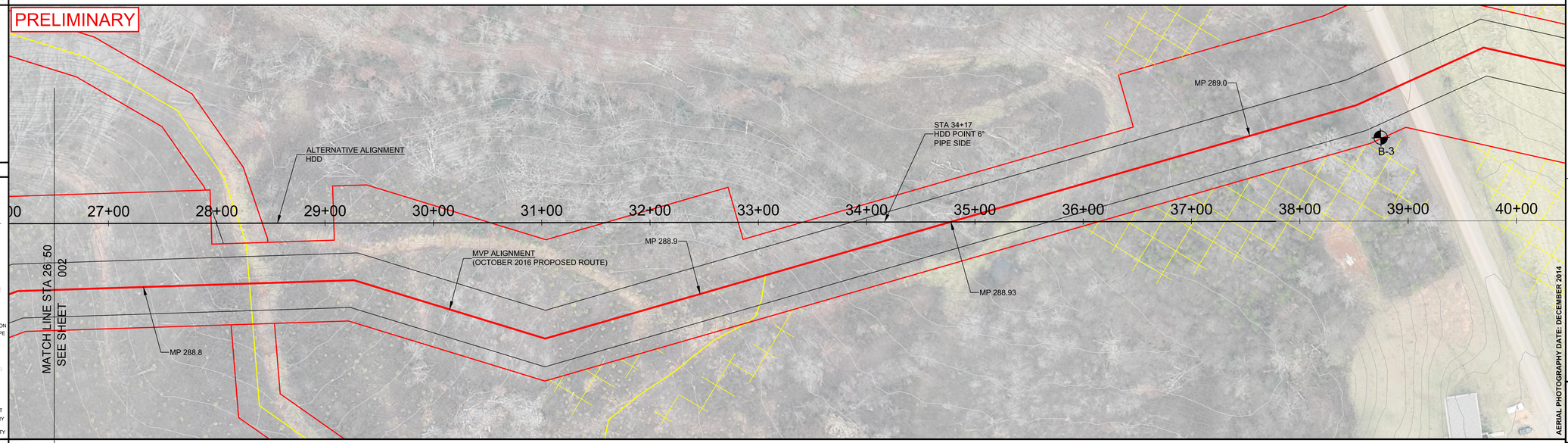

PLAN VIEW

LEGEND

- PROPOSED 42"PIPELINE
- NON-SURVEYED C□L
- 500□TICK MARK
- EXISTING PIPELINE
- PERMANENT EASEMENT
- WORK SPACE LIMITS
- PERMANENT ACCESS RD
- TEMPORARY ACCESS RD
- ANCILLARY SITE
- PROPERTY LINE
- ROAD RIGHT-OF-WAY
- FENCE LINE
- OVERHEAD POWER
- OVERHEAD TELEPHONE
- C□L ROAD
- C□L RAILROAD
- DELINEATED STREAM
- DELINEATED WETLAND
- PI SYMBOL
- PROPOSED TEST STATION
- MAILBOX
- LINE MARKER - VENT PIPE
- POWER□TELE POLE
- SIGN
- TOWER LEG
- TREE
- GUY ANCHOR
- TANK
- GAS VALVE
- WELL - GAS□OIL□WATER□MONITORING
- POST - GATE□FENCE
- ELEC GAS WTR METER
- PEDESTAL - UTILITY
- MH - SANITARY□WATER
- CATCH BASIN - CULVERT
- ADDITIONAL TEMPORARY WORK SPACE□ATWS□
- ABOVE GROUND FACILITY

REFERENCE DRAWINGS

DRAWING NO.	DESCRIPTION

WORK SPACE

- PROPOSED PIPELINE
- EXISTING PIPELINE
- WORK SPACE LIMITS
- PERMANENT EASEMENT
- TEMPORARY WORK SPACE□TWS□
- ADD. TEMPORARY WORK SPACE ATWS□

CONSTRUCTION METHOD

CONSTRUCTION METHOD KEY

1 -
2 -
3 -
4 -
5 -
6 -
7 -
8 -
9 -
10 -
11 -
12 -
13 -
14 -
15 -
16 -

PROFILE

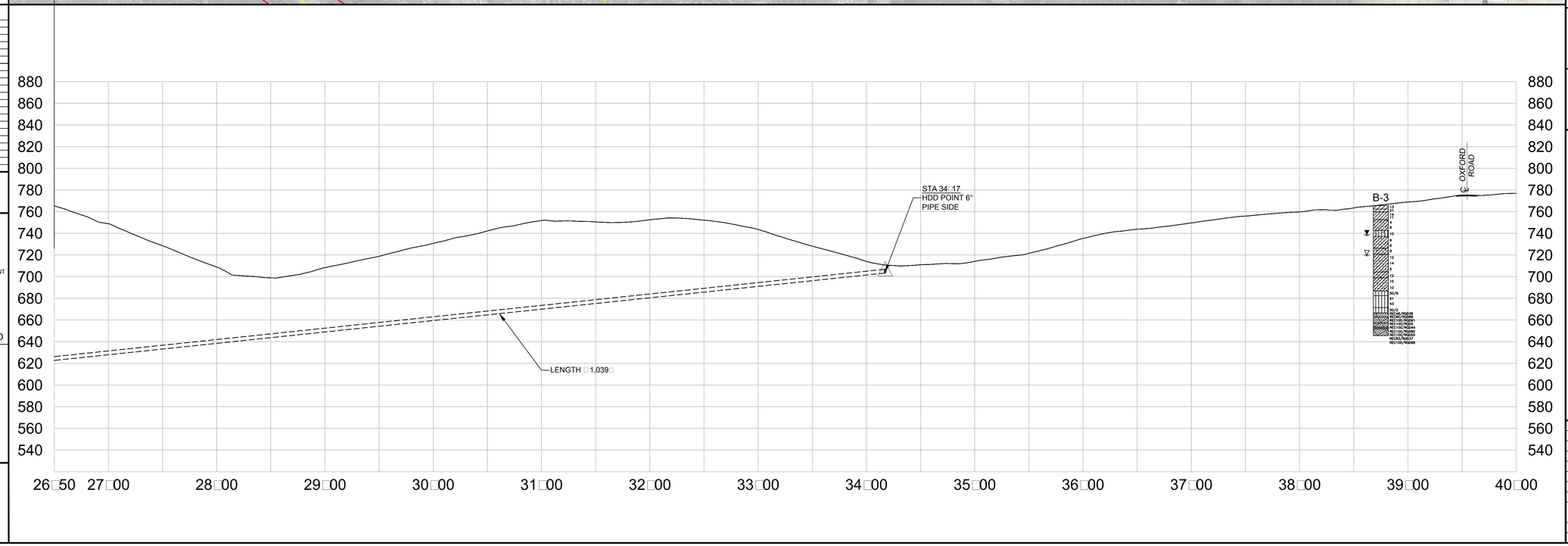

PIGG RIVER ALTERNATIVE ALIGNMENT - HDD

REVISIONS

REV.	BY	DATE	DESCRIPTION
-	-	-	-

MATERIAL SUMMARY

MK. NO.	QTY.	DESCRIPTION

AERIAL PHOTOGRAPHY DATE: DECEMBER 2014

APPROVED FOR CONSTRUCTION

REV.	BY	DATE
-	-	-

APPROVED FOR BIDDING

REV.	BY	DATE
-	-	-

APPROVED FOR FERC

REV.	BY	DATE
0	-	-

Mountain Valley PIPELINE

PIPELINE ALIGNMENT

MOUNTAIN VALLEY PROJECT - H600 LINE

PITTSYLVANIA CO., VA.

HOR□ SCALE: 1" = NTS	
DRAWN BY: HEI DRF□	9□14□2016
DRAFTING CK:	
ENGINEERING CK:	
CONSTRUCTION CK:	
ENVIRONMENTAL CK:	
AFE□P.O.NO.□:	
HEI PROJECT NO.□: 14-10-052	
DRAWING NO.□: PA-GIVA-H600	
SHEET XX OF XX	REV. -
DATE OF PLOT: 10□7□2016 9:10:11 AM	

Responses to Data Requests

Attachment DR3 Water Resources-12

Mountain Valley Pipeline:
Vertical Scour and
Lateral Channel Erosion Analyses
October 2016

Prepared for Mountain Valley Pipeline, LLC

Prepared by Tetra Tech, Inc.

Submitted: October 7, 2016

TABLE OF CONTENTS

1.0 OVERVIEW 1

2.0 DATA 2
2.1 VERTICAL SCOUR ANALYSIS 2
2.1.1 Design Discharge 2
2.1.2 Particle Size Distribution 2
2.1.2.1 Major Waterbody Crossings 3
2.1.2.2 Intermediate Waterbody Crossings 3
2.1.3 Channel Hydraulics 3
2.1.4 Bedrock 4
2.2 LATERAL CHANNEL EROSION ANALYSIS 4

3.0 METHODS 5
3.1 VERTICAL SCOUR ANALYSIS 5
3.1.1 General Scour 5
3.1.2 Component Scour 5
3.1.2.1 Bend Scour 6
3.1.2.2 Bedform Scour 6
3.1.2.3 Contraction Scour 6
3.1.2.4 Local Scour 6
3.2 LATERAL CHANNEL EROSION ANALYSIS 6
3.2.1 HMZ – Greater than 40 feet Top of Bank Width 7
3.2.2 HMZ – Less than 40 feet Top of Bank Width 7

4.0 RESULTS 8
4.1 POTENTIAL VERTICAL SCOUR 8
4.1.1 General Scour 8
4.1.2 Component Scour 8
4.1.3 Maximum Vertical Sour Estimate 9
4.2 POTENTIAL LATERAL CHANNEL EROSION 9

5.0 MITIGATION MEASURES 10
5.1 VERTICAL SCOUR 10
5.1.1 Bedrock 10
5.1.2 Armoring Layer 10
5.1.3 Revetment Mats 11
5.2 POTENTIAL LATERAL CHANNEL EROSION 11

6.0 REFERENCES 13

TABLES

Table 5-1: Primary Mitigation Measures 10
Table A-1: Vertical Scour Estimates and Mitigation A-1
Table B-1: Potential Lateral Channel Erosion and Mitigation B-1

FIGURES

Figure 5-1: Construction Typical Horizontal Setback 12

APPENDICES

Appendix A: Vertical Scour Estimates and Mitigation
Appendix B: Potential Lateral Channel Erosion and Mitigation

LIST OF ACRONYMS

CFS	Cubic Feet per Second
D50	Median Particle Size
DRNAREA	Drainage Area
EQT	EQT Midstream Partners, LP
EROS	Earth Resources Observation and Science
FERC	Federal Energy Regulatory Commission
FS	Factor of Safety
Ft	Feet
GPS	Global Positioning System
HEC-RAS	Hydrologic Engineering Center River Analysis System
HMZ	Historical Migration Zone
ID	Identification
LDB	Left Descending Bank
LiDAR	Light Detection and Ranging
mm	Millimeter
Mountain Valley	Mountain Valley Pipeline, LLC
MP	Mile Post
MVP	Mountain Valley Pipeline
NA	Not Applicable
NRPW	Non-Relatively Permanent Waterway
RDB	Right Descending Bank
RI	Recurrence Interval
ROW	Right-of-Way
RPW	Relatively Permanent Waterway
Sq. mi.	Square Mile(s)
UNT	Unnamed Tributary
Q	Discharge
RTK	Real-Time Kinematic
TNW	Traditional Navigable Waterway

1.0 OVERVIEW

The proposed Mountain Valley Pipeline (MVP) is a 42-inch diameter natural gas pipeline traversing approximately 301 miles and 17 counties in West Virginia and Virginia. The project will extend the existing EQT Midstream Partners, LP (EQT) system from Wetzel County, West Virginia to the Transcontinental Gas Pipe Line Company, LLC Zone 5 Compressor Station 165 in Pittsylvania County, Virginia. The proposed pipeline crosses 128 perennial waterbodies with Federal Energy Regulatory Commission (FERC) classifications of intermediate or major. This includes 124 intermediate and four (4) major. FERC permitting requires vertical scour and lateral channel erosion analyses. This report describes the methods, assumptions, data limitations, and results for the analyses, which were conducted at all proposed perennial major and perennial intermediate FERC classification waterbody crossings.

2.0 DATA

2.1 VERTICAL SCOUR ANALYSIS

Vertical scour analyses require a number of data inputs to estimate potential scour depth. The approach used in this study utilized the following primary data inputs:

- Design discharge
- Stream bed particle size
- Channel hydraulics (i.e., width, depth, velocity)
- Depth to bedrock

The following sections describe the methods to obtain data outlined above and the associated assumptions.

2.1.1 Design Discharge

Gaging stations are not present directly at the proposed waterbody crossings. Therefore, design discharge estimates were required. This study utilized the estimated 2-year and 100-year peak discharge values. The 2-year peak discharge is assumed to be equivalent to bankfull discharge (Messinger, 2009; Lotspeich, 2009). The bankfull discharge is required to estimate the median particle size; details are provided in Section 2.1.2.2. The bankfull discharge was also utilized to calculate bend scour; details are provided in Section 3.1.2.1. The 100-year peak discharge is a standard design discharge for estimating general channel scour.

These design discharges were estimated via the peak-flow regional regression equations developed by the United States Geological Survey (USGS) (Wiley & Atkins, 2010; Austin, Krstolic, & Wiegand, 2011). The equations require two input parameters: drainage area and location of the drainage area. Drainage areas located in West Virginia were estimated via the online tool offered by the West Virginia Department of Environmental Protection Technical Applications and GIS Unit (7Q10 Flow Estimates, n.d.). Drainage areas located in Virginia were estimated via the online tool offered by the USGS (StreamStats, n.d.). The waterbody crossings are located within two West Virginia regions (Central Mountains and Western Plateaus) (Wiley & Atkins, 2010) and three Virginia regions (Piedmont, Blue Ridge, and Valley and Ridge) (Austin, Krstolic, & Wiegand, 2011).

2.1.2 Particle Size Distribution

Particle size distribution data, specifically the median particle size (D50), is a required data input for scour calculations. Therefore, a D50 estimate is required for each waterbody crossing. The following describes the methods utilized for major and intermediate waterbody crossings.

2.1.2.1 Major Waterbody Crossings

Detailed field data was collected to generate surface and subsurface particle size distributions at the four major waterbody crossings, which include the Gauley River, Greenbrier River, Elk River, and Little Kanawha River. A pebble count study was performed to estimate surface particle size distributions, because an established armor layer is present (Bunte & Abt, 2001). A sieve analysis was performed to estimate subsurface particle size distribution (Bunte & Abt, 2001).

The particle size distribution, specifically subsurface, represents a single point in the river. However, river systems are complex, non-homogeneous systems, and point data does not necessarily represent conditions across the river reach of interest. Therefore, scour calculations using pebble count and sieve analysis data were run at 90, 100, and 110 percent of the estimated D50 value to account for uncertainties. The particle size that produced the deepest potential scour depth was used in the calculation estimate.

2.1.2.2 Intermediate Waterbody Crossings

Quantitative and qualitative methods were used to estimate a D50 value at each proposed intermediate waterbody crossing. The D50 value was estimated quantitatively via a regime relationship that utilizes the bankfull discharge and the channel slope (USACE, Channel Stability Assessment for Flood Control Projects, 1994). Bankfull discharge was assumed to be the estimated 2-year peak-flow discharge (Messinger, 2009; Lotspeich, 2009) and was estimated via the methods described in Section 2.1.1. The channel slope was estimated from 2-foot contour light detection and ranging (LiDAR) data obtained from Mountain Valley Pipeline, LLC (Mountain Valley). The estimated D50 value was verified qualitatively by reviewing project stream assessment field notes and photographs.

Regime estimated D50 values have a relatively high degree of uncertainty. Therefore, scour calculations using regime estimated values were run at 50, 100, and 150 percent of the estimated D50 value to account for uncertainties. The particle size that produced the deepest potential scour depth was used in the calculation estimate.

2.1.3 Channel Hydraulics

Channel hydraulics were estimated via a simplified Hydrologic Engineering Center River Analysis System (HEC-RAS) model at each proposed waterbody crossing. The primary inputs in the HEC-RAS model included the following: channel geometry, channel slope, Manning's roughness coefficient, and design discharge. Channel geometry and channel slope were generated from project LiDAR with 2-foot contours. The Manning's roughness coefficient was estimated according to USGS guidelines (Arcement & Schneider, 1989). The hydraulic model was run for two design discharges: 2-year peak-flow discharge and 100-year peak-flow discharge. The peak-flow discharge values were estimated via the methods described in Section 2.1.1.

2.1.4 Bedrock

Vertical scour estimates performed in this study assume near surface bedrock material is not present. Vertical scour would be limited to depth of bedrock. Therefore, Tetra Tech conducted detailed field work via seismic refraction and electrical resistivity analyses at the four (4) major waterbody crossings, and Mountain Valley conducted a desktop review via geographic information system (GIS) data and soil resistivity data at the 124 intermediate waterbody crossings.

2.2 LATERAL CHANNEL EROSION ANALYSIS

This study utilizes a framework for delineating channel migration zones to predict areas at risk of future lateral channel erosion due to fluvial processes (Rapp & Abbe, 2003). This analysis requires topographic data and present and historic aerial imagery. Topographic data was obtained from project LiDAR with 2-foot contours. Aerial imagery was obtained from the Earth Resources Observation and Science (EROS) Center (Areial Photography, n.d.). Present and historic aerial imagery dates included 2010-2015 and 1949-1976, respectively. Analysis method details are described in Section 3.2.

3.0 METHODS

The following sections describe the methods used in this study to estimate potential vertical scour and lateral channel erosion.

3.1 VERTICAL SCOUR ANALYSIS

Total potential vertical scour at a given river location may be estimated via general scour equations and/or the summation of component scour. Component scour calculation estimates must consider the summation of long-term bed elevation change, bedform scour, contraction scour, and scour associated with structures (i.e., local scour). Therefore, a comprehensive approach is required to estimate scour for a given design discharge and river reach. This study took the following components into consideration:

- General channel scour
- Component scour
    - Bend scour
    - Bedform scour
    - Contraction scour
    - Local scour (scour associated with structures)

The following briefly describes the components outlined above and the associated assumptions.

3.1.1 General Scour

General scour equations assume uniform degradation of the channel for a given river reach and discharge. The 100-year peak-flow discharge estimate from methods described in Section 2.1.1 was utilized in this study to estimate general scour. Empirical and regime equations have been developed to estimate total general scour. However, the various equations are only applicable for specified condition ranges. This study assessed the applicability of three general scour equations: Lacey regime equation, Blench regime equation, and Borah armor layer equation. The Lacey and Blench regime equations are only appropriate when the predominant bed material is 0.06 – 2 mm (sand particle size range) (NRCS, 2007). The Borah armor layer equation is typically only applicable when the predominant bed material is greater than 6 mm (gravel and larger) (NRCS, 2007).

3.1.2 Component Scour

The component method estimates potential vertical scour by summing the estimates from each contributing scour mechanism. This study assessed the following contributing scour components: bend, bedform, contraction, and local. The following briefly describes each component.

3.1.2.1 Bend Scour

Bend scour occurs when flow through channel meander bends results in eddy flow patterns that move sediment from the outside to the inside of the meander bend. This scour effect is most significant at bankfull events because the flow energy dissipates when waterbody levels overtop the channel bank. Therefore, bend scour estimates in the study use values associated with the 2-year flood event peak discharge estimate, which was assumed to be approximately equivalent to a bankfull event (Lotspeich, 2009; Austin, Krstolic, & Wiegand, 2011). Bend scour was estimated via regime relationships described in the Corps of Engineers Manual 1110-2-1601 (USACE, Hydraulic Design of Flood Control Channel, 1994).

3.1.2.2 Bedform Scour

Bedform scour occurs when ripples, dunes, and antidunes form on the bed surface. This is applicable when the predominant bed material is in the sand particle size range. Bedform scour was estimated, when appropriate, to be half of the calculated bedform height (NRCS, 2007).

3.1.2.3 Contraction Scour

Contraction scour occurs when higher velocities are present due to constricted flow conditions. Natural (i.e. ice jams, bedrock, etc) and/or anthropogenic (i.e. bridges, culverts, etc) features in the channel can restrict the flow cross-section. Contraction scour is most typically associated with bridge structures (NRCS, 2007). Aerial imagery (Google, 2013, 2015, 2016) and project stream assessment field photographs were reviewed for possible contraction scour.

3.1.2.4 Local Scour

Local scour occurs when anthropogenic structures (i.e., bridge piers, weirs/sills, culverts, dams, etc.) in the channel alter the natural flow regime (NRCS, 2007). Aerial imagery (Google, 2013, 2015, 2016) and project stream assessment field photographs were reviewed for possible contraction scour.

3.2 LATERAL CHANNEL EROSION ANALYSIS

This study utilized a framework for delineating the historical migration zone (HMZ) to predict areas at risk of future lateral channel erosion due to fluvial processes (Rapp & Abbe, 2003). The HMZ is defined by the extent of area the channel occupied over the available historic record. It encompasses the current waterbody course and has the highest likelihood of lateral erosion. Planimetric analysis of historical aerial photography is typically used to determine the HMZ (Rapp & Abbe, 2003). However, planimetric analysis using aerial photography is not feasible for small streams due to difficulty distinguishing channel banks through closed, as well as open, canopy and resolution limitations common to older photographic sources. Furthermore, the margin of error during the digitization process is often too large, as a percentage of bank width, to be useful. Therefore, two approaches were required: one for waterbody crossings with top of bank widths

greater than 40 feet and another for waterbody crossings with top of bank widths less than 40 feet.

3.2.1 HMZ – Greater than 40 feet Top of Bank Width

The oldest, digitally available, historic aerial photography for each waterbody crossing was obtained and georeferenced (Areial Photography, n.d.). The most recently available, high-resolution orthophotography was also obtained (Areial Photography, n.d.). The bank lines for both the historic and recent aerial imagery were digitized and merged to delineate the extent of the HMZ (Rapp & Abbe, 2003). Project LiDAR was also analyzed for evidence of historic channel locations that may not have been captured by available aerial photography.

3.2.2 HMZ – Less than 40 feet Top of Bank Width

High-resolution project LiDAR was analyzed to estimate the HMZ. Project LiDAR and its first derivative (slope) were used to map the existing banks and identify relic channels, meander scars, and other fluvial features that indicate previous channel locations. The HMZ was drawn to encompass the existing channel corridor and any identified features that indicate past channel locations (Rapp & Abbe, 2003).

4.0 RESULTS

4.1 POTENTIAL VERTICAL SCOUR

Potential vertical scour was analyzed via the methods described in Section 3.1. This included a general scour and component scour analysis. The following summarizes the vertical scour results generated by this study.

4.1.1 General Scour

The appropriate general scour equation(s) described in Section 3.1.1 were selected based on the predominant bed material present at a given waterbody crossing. The predominant bed material at some waterbody crossings was a mix of sand and gravel. Therefore, the general scour equations for both bed types were assessed at these waterbody crossings.

The predominant bed material was gravel or larger at the 4 major and 109 intermediate waterbody crossings. Therefore, the Borah armor layer equation was utilized to estimate the potential vertical scour at these waterbody crossings. The general scour estimates via the Borah armor layer equation for the 4 major and 109 intermediate ranged from 0.1 – 4.8 feet and 0.1 – 18.6 feet, respectively.

The predominant bed material was sand at 18 intermediate waterbody crossings. Therefore, the Lacey and Blench regime equations were utilized to estimate the potential vertical scour at these waterbody crossings. The general scour estimates via the Lacey and Blench regime equations for the 18 intermediate waterbody crossings ranged from 0.8 – 12.6 feet.

The most conservative (deepest) potential vertical scour estimate for waterbody crossing was retained as the maximum general scour. The maximum general scour estimates for the 4 major and 124 intermediate waterbody crossings ranged from 0.1 – 4.8 feet and 0.3 – 18.6 feet, respectively. The general scour estimate details for each waterbody crossing are presented in Appendix A, Table A-1.

4.1.2 Component Scour

Potential vertical scour was estimated via the summation of each applicable scour component outlined in Section 3.1.2 at a given waterbody crossing. The components included the following: bend scour, bedform scour, contraction scour, and local scour. Bend scour estimates for the 4 major and 124 intermediate waterbody crossing ranged from 0.0 – 10.4 and 0.0 – 8.7 feet, respectively. There was no potential for bedform scour at the 4 major waterbody crossings (NRCS, 2007). Furthermore, potential for bedform scour was only present at 15 intermediate waterbody crossings and the estimates ranged from 0.0 – 0.6 feet. Aerial photography (Google, 2013, 2015, 2016) and project stream assessment field photographs were reviewed for potential contraction and/or local scour effects. Potential for significant contraction scour resulting from structures (i.e., bridges) was not observed. Similarly, no structures were identified that would cause local scour at any proposed waterbody crossings. Therefore, these values are reported as not applicable (NA). Total component scour estimates for the 4 major and 124 intermediate

waterbody crossings ranged from 0.0 – 10.4 and 0.0 – 8.7 feet, respectively. The component scour estimate details for each waterbody crossing are presented in Appendix A.

4.1.3 Maximum Vertical Sour Estimate

The most conservative (deepest) result via the general and component scour analyses was retained for the maximum potential vertical scour estimate at each waterbody crossing. Furthermore, a 20% factor of safety (FS) was also added to the maximum potential vertical scour estimate. This is an engineering standard best practice, which is intended to account for data uncertainties and potential long-term bed elevation change. The maximum vertical scour estimates with a 20% FS for the 4 major and 124 intermediate waterbody crossings ranged from 0.1 – 12.5 and 0.4 – 22.3 feet, respectively. The maximum vertical scour estimates with a 20% FS details for each waterbody crossing are presented in Appendix A. These vertical scour estimates assume near surface bedrock material is not present. Vertical scour would be limited to the depth of bedrock. Bedrock details are provided in Section 2.1.4 and Appendix A.

4.2 POTENTIAL LATERAL CHANNEL EROSION

The HMZ was delineated for each waterbody crossing via the methods described in Section 3.2. The length of pipeline within the HMZ was measured from the current channel centerline to the lateral extent associated with left descending bank (LDB) and right descending bank (RDB). The HMZ may not be symmetrical about the current channel centerline. The length of pipeline within the HMZ for the 4 major waterbody crossings ranged from 58 – 220 feet and 53 – 215 feet for the LDB and RDB, respectively. The length of pipeline within the HMZ for the 124 intermediate waterbody crossings ranged from 5 – 505 feet and 3 – 463 feet for the LDB and RDB, respectively. Pipeline length measurements within the HMZ for each waterbody crossing are presented in Appendix B, Table B-1.

5.0 MITIGATION MEASURES

5.1 VERTICAL SCOUR

Mountain Valley proposes to employ a variety of mitigation strategies to prevent scour from affecting the proposed MVP at waterbody crossings. The primary mitigation strategies are provided in Table 5-1 below. The proposed burial depths for each waterbody crossing are provided in Appendix A, Table A-1.

Table 5-1: Primary Mitigation Measures

Estimated Scour Depth (ft)	Proposed Mitigation Measure(s)	Mitigation ID
<1.50	None Required; installed per 49 CFR 192.327 (PHMSA & DOT, 2011)	NA
≥1.50 and <2.25	Pipeline buried with a minimum of 3-foot depth of cover Pipeline buried with a minimum 4-foot depth of cover if considered a navigable waterbody	A
≥2.25 and <3.00	Pipeline buried with a minimum of 4-foot depth of cover	B
≥3.00 and <3.75	Pipeline buried with a minimum of 5-foot depth of cover	C
≥3.75 and <4.50	Pipeline buried with a minimum of 6-foot depth of cover	D
≥4.50 and <5.25	Pipeline buried with a minimum of 7-foot depth of cover	E
≥5.25	Mitigation option(s) detailed in Sections 5.1.1, 5.1.2, and/or 5.3	F

Notes:

ID: Identification

NA: not applicable

5.1.1 Bedrock

Potential scour is limited to the bedrock surface. Therefore, no additional mitigation is required if the pipeline is installed below the bedrock surface. Pipeline burial depths provided in Table 5-1 will be decreased to the bedrock surface if two requirements are met: bedrock depth is shallower than 7 feet and bedrock depth is shallower than the burial depth provided in Table 5-1. Estimated bedrock depth data was gathered via the methods outlined in Section 2.1.4 and is presented in Appendix A, Table A-1. Bedrock depths will be field verified during construction.

5.1.2 Armoring Layer

Mountain Valley would consider using an armoring layer at the pipeline crossing as a mitigation option if the estimated scour depth exceeds 5.25 feet and bedrock depth is greater than 7 feet. An armoring layer with a given minimum particle size would restrict potential scour for a given discharge event. The proposed armoring layer would consist of particle sizes that are equal to or greater than the minimum armor particle size corresponding to the 100-year peak discharge

design estimate. The armoring layer would also be placed upstream and downstream of the pipeline crossing to prevent local scour. Pipeline burial depth would be determined after the size of the armoring layer is finalized.

5.1.3 Revetment Mats

Mountain Valley would consider using revetment mats at the pipeline crossing as a mitigation option if the estimated scour depth exceeds 5.25 feet and bedrock depth is greater than 7 feet. Revetment mats are engineered materials that form an erosion-resistant protective barrier. Revetment mats would also be placed upstream and downstream of the pipeline crossing to prevent local scour. Pipeline burial depth would be determined after the size of the revetment mat is finalized.

5.2 POTENTIAL LATERAL CHANNEL EROSION

Mountain Valley proposes to utilize the delineated HMZ with a FS to determine the horizontal setback for each waterbody crossing. The added FS will be the greater of 5 feet or 20% of the HMZ width at the waterbody crossing. Figure 5-1 is a construction typical of the proposed horizontal setback for a hypothetical waterbody crossing. The X setback value corresponds to the 20% FS. The proposed pipeline will be installed at an elevation equal to or greater than the elevation corresponding to the in-channel maximum potential vertical scour depth reported in Section 4.1.3 while within the HMZ and 20% FS. Pipeline length measurements within the HMZ with 20% FS for each waterbody crossing are presented in Appendix B, Table B-1.

Figure 5-1: Construction Typical Horizontal Setback

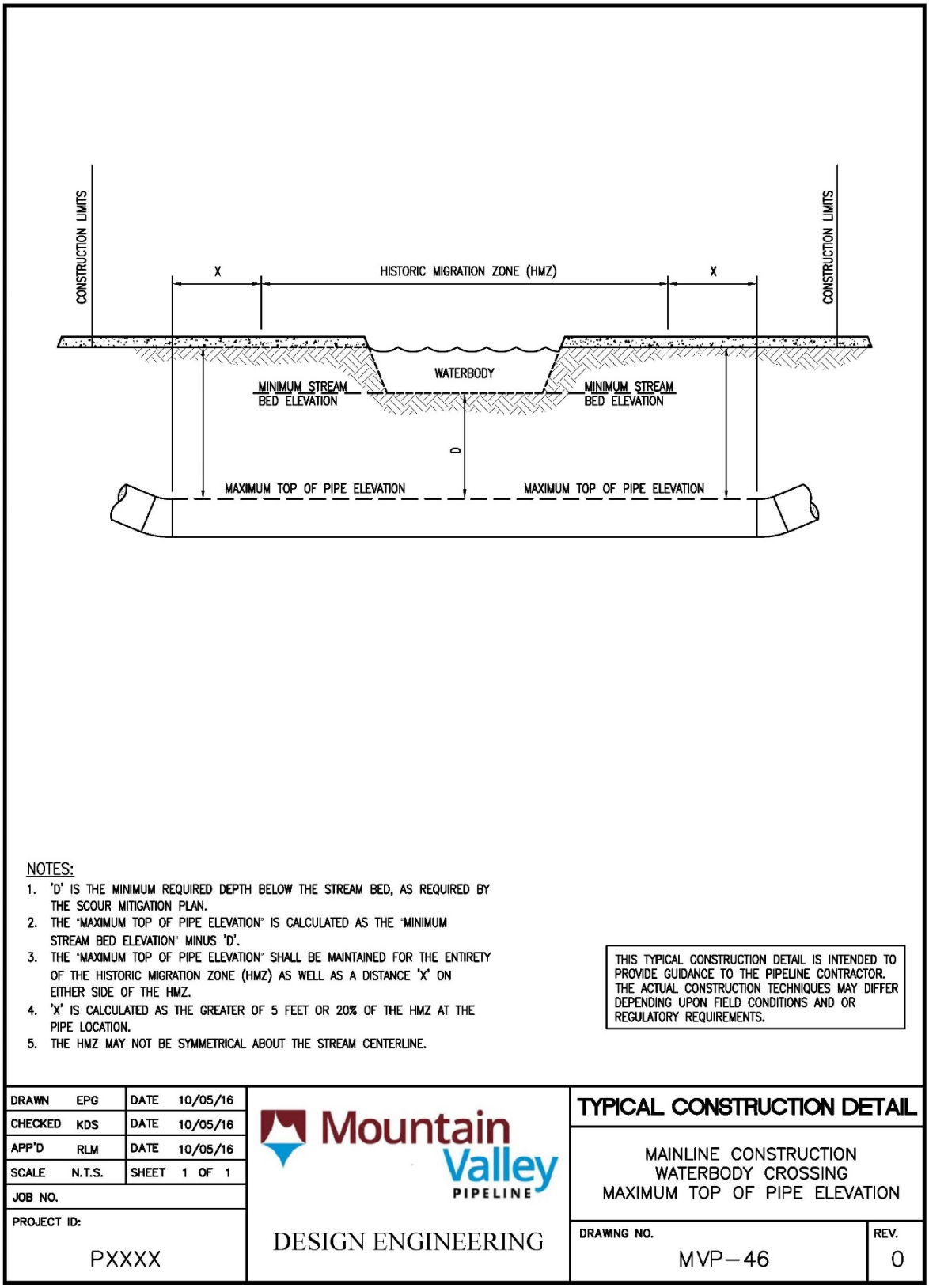

6.0 REFERENCES

7Q10 Flow Estimates. (n.d.). Retrieved from TAGIS: WVDEP Technical Applications and GIS Unit: http://tagis.dep.wv.gov/streamflow/

Arcement, G. J., & Schneider, V. R. (1989). *Guide for Selecting Manning's Roughness Coefficients for Natural Channels and Flood Plains.* Denver, CO: U.S. Geological Survey Water-Supply Paper 2339.

Areial Photography. (n.d.). Retrieved from USGS: Earth Resource Observation and Science Center: http://eros.usgs.gov/aerial-photography

Austin, S., Krstolic, J., & Wiegand, U. (2011). *Peak-flow characteristics of Virginia streams.* Reston, Virginia: U.S. Geological Survey Scientific Investigations Report 2011–5144, 106 p.

Bunte, K., & Abt, S. R. (2001). *Sampling Surface and Subsurface Particle-Size Distributions in Wadable Gravel- and Cobble-Bed Streams for Analyses in Sediment Transport, Hydraulics, and Streambed Monitoring.* Fort Collins, CO: U.S. Department of Agriculture, U.S. Forest Service, Rocky Mountain Research Station General Technical Report RMRS-GTR-74.

Google. (2013, 2015, 2016). *Google Earth*. Retrieved from https://www.google.com/earth/

Lotspeich, R. (2009). *Regional curves of bankfull channel geometry for non-urban streams in the Piedmont Physiographic Province, Virginia.* Reston, Virginia: U.S. Geological Survey Scientific Investigations Report 2009– 5206, 51 p.

Messinger, T. (2009). *Regional curves for bankfull channel characteristics in the Appalachian Plateaus, West Virginia.* Reston, Virginia: U.S. Geological Survey Scientific Investigations Report 2009–5242, 43 p.

NRCS. (2007). *Technical Supplement 14B: Scour Calculations.* U.S. Department of Agriculture Natural Resources Conservation Service National Engineering Handbook.

PHMSA, & DOT. (2011). 49 CFR 192.327 - COVER. Washington, D.C.: U.S. Government Publishing Office.

Rapp, C. F., & Abbe, T. B. (2003). *A Framework for Delineating Channel Migration Zones.* Washington State Department of Transportation: Ecology Final Draft Publication #03-06-027.

StreamStats. (n.d.). Retrieved from United States Geological Survey: http://streamstatsags.cr.usgs.gov/streamstats/

USACE. (1994). *Channel Stability Assessment for Flood Control Projects.* Washington D.C.: U.S. Army Corps of Engineers: Engineer Mannual 1110-2-1418.

USACE. (1994). *Hydraulic Design of Flood Control Channel.* Washington, D.C.: U.S. Army Corps of Engineers: Engineer Mannual 1110-2-1601.

Wiley, J. B., & Atkins, J. T. (2010). *Estimation of Flood-Frequency Discharges for Rural, Unregulated Streams in West Virginia.* Reston, Virginia: U.S. Geological Survey Scientific Investigations Report 2010–5033, 78 p.

APPENDIX A: VERTICAL SCOUR ESTIMATES AND MITIGATION

Table A-1: Vertical Scour Estimates and Mitigation

Waterbody Name	FERC Classification	Location			Drainage Basin		Estimated Peak-Flow Discharge (RI)		Particle Size	General Scour Estimates (ft)				Component Scour Estimates (ft)					Maximum Vertical Scour Estimate with 20% FS	Estimated Bedrock Depth (ft)[1]	Proposed Vertical Scour Mitigation Method (ID)[2]	Proposed Pipeline Burial Depth (ft)[3]
		State	County	MP	Drainage Area (sq. mi.)	Regression Region	2-year (cfs)	100-year (cfs)	Estimated D50 (mm)	Borah	Lacey	Blench	Maximum General	Bend	Bedform	Contraction	Local	Total Component				
North Fork Fishing Creek	Intermediate	West Virginia	Wetzel	0.7	5.7	Western-Plateaus Region	462	1809	10	1.1	NA	NA	1.1	0.3	NA	NA	NA	0.3	1.3	6.7	NA	3
Fallen Timber Run	Intermediate	West Virginia	Wetzel	2.3	0.7	Western-Plateaus Region	101	446	1	NA	0.8	3.6	3.6	0.0	0.3	NA	NA	0.3	4.3	6.7	D	6
Price Run	Intermediate	West Virginia	Wetzel	5.0	11.0	Western-Plateaus Region	741	2797	43	1.7	NA	NA	1.7	1.7	NA	NA	NA	1.7	2.0	6.7	A	3 (4 if Navigable Waterbody)
Sams Run	Intermediate	West Virginia	Wetzel	7.9	1.1	Western-Plateaus Region	141	605	86	3.5	NA	NA	3.5	0.0	NA	NA	NA	0.0	4.2	6.7	D	6
Little Tenmile Creek	Intermediate	West Virginia	Harrison	15.4	15.2	Western-Plateaus Region	938	3479	2	0.1	1.5	2.7	2.7	0.0	0.0	NA	NA	0.0	3.3	6.7	C	5
Little Rockcamp Run	Intermediate	West Virginia	Harrison	17.8	1.5	Western-Plateaus Region	176	744	47	0.4	NA	NA	0.4	0.0	NA	NA	NA	0.0	0.5	6.7	NA	3
Rockcamp Run	Intermediate	West Virginia	Harrison	18.7	5.3	Western-Plateaus Region	437	1720	21	0.4	NA	NA	0.4	0.0	NA	NA	NA	0.0	0.4	6.7	NA	3
Grass Run	Intermediate	West Virginia	Harrison	20.8	2.3	Western-Plateaus Region	236	972	1	NA	1.1	2.0	2.0	0.0	0.0	NA	NA	0.0	2.5	6.7	B	4
UNT to Grass Run	Intermediate	West Virginia	Harrison	21.6	1.4	Western-Plateaus Region	169	715	1	NA	1.0	2.0	2.0	0.0	0.2	NA	NA	0.2	2.4	6.7	B	4
Indian Run	Intermediate	West Virginia	Harrison	23.0	2.5	Western-Plateaus Region	254	1040	30	0.3	NA	NA	0.3	0.0	NA	NA	NA	0.0	0.4	6.7	NA	3
Salem Fork	Intermediate	West Virginia	Harrison	25.9	14.6	Western-Plateaus Region	915	3401	1	NA	1.6	2.4	2.4	0.0	0.0	NA	NA	0.0	2.9	6.7	B	4
Laural Run	Intermediate	West Virginia	Doddridge	34.8	2.0	Western-Plateaus Region	212	881	43	2.0	NA	NA	2.0	0.0	NA	NA	NA	0.0	2.4	6.7	B	4
Right Fork Freemans Creek	Intermediate	West Virginia	Lewis	42.5	3.2	Western-Plateaus Region	303	1224	38	1.1	NA	NA	1.1	0.0	NA	NA	NA	0.0	1.3	6.7	NA	3
Fink Creek	Intermediate	West Virginia	Lewis	44.7	1.7	Western-Plateaus Region	187	786	1	NA	1.0	1.4	1.4	0.0	0.0	NA	NA	0.0	1.6	6.7	A	3 (4 if Navigable Waterbody)
Left Fork Freemans Creek	Intermediate	West Virginia	Lewis	45.8	1.5	Western-Plateaus Region	173	732	34	0.5	NA	NA	0.5	2.3	NA	NA	NA	2.3	2.8	6.7	B	4
Sand Fork	Intermediate	West Virginia	Lewis	55.1	12.5	Western-Plateaus Region	816	3059	26	0.5	NA	NA	0.5	2.4	NA	NA	NA	2.4	2.9	8.7	B	4
Indian Fork	Intermediate	West Virginia	Lewis	58.5	5.1	Western-Plateaus Region	426	1677	42	0.5	NA	NA	0.5	0.0	NA	NA	NA	0.0	0.6	6.7	NA	3
UNT to Bens Run	Intermediate	West Virginia	Lewis	59.4	0.7	Western-Plateaus Region	99	435	2	3.1	1.5	2.6	3.1	0.4	0.0	NA	NA	0.4	3.7	2.5	C	2.5
UNT to Indian Fork	Intermediate	West Virginia	Lewis	59.9	0.2	Western-Plateaus Region	36	173	152	10.5	NA	NA	10.5	0.2	NA	NA	NA	0.2	12.6	5.0	F	5
Second Big Run	Intermediate	West Virginia	Lewis	61.2	0.4	Western-Plateaus Region	70	315	164	7.5	NA	NA	7.5	0.3	NA	NA	NA	0.3	9.0	8.7	F	Alternative Mitigation
UNT to Second Big Run	Intermediate	West Virginia	Lewis	61.3	0.4	Western-Plateaus Region	70	319	164	7.5	NA	NA	7.5	0.3	NA	NA	NA	0.3	9.0	8.7	F	Alternative Mitigation
Clover Fork	Intermediate	West Virginia	Lewis	65.4	2.2	Western-Plateaus Region	228	943	11	1.3	NA	NA	1.3	0.0	NA	NA	NA	0.0	1.5	6.7	A	3 (4 if Navigable Waterbody)
Barbecue Run	Intermediate	West Virginia	Braxton	67.4	0.7	Western-Plateaus Region	99	437	79	1.9	NA	NA	1.9	0.0	NA	NA	NA	0.0	2.2	6.7	A	3 (4 if Navigable Waterbody)
Left Fork Knawl Creek	Intermediate	West Virginia	Braxton	68.7	2.6	Western-Plateaus Region	262	1072	47	1.2	NA	NA	1.2	0.0	NA	NA	NA	0.0	1.4	6.7	NA	3
Knawl Creek	Intermediate	West Virginia	Braxton	68.7	3.8	Western-Plateaus Region	340	1364	39	1.2	NA	NA	1.2	2.0	NA	NA	NA	2.0	2.4	6.7	B	4
UNT to Falls Run	Intermediate	West Virginia	Braxton	71.6	0.4	Western-Plateaus Region	72	324	69	2.7	NA	NA	2.7	0.0	NA	NA	NA	0.0	3.2	11.0	C	5
Falls Run	Intermediate	West Virginia	Braxton	72.4	8.0	Western-Plateaus Region	590	2267	51	1.2	NA	NA	1.2	2.2	NA	NA	NA	2.2	2.6	11.0	B	4
Little Kanawha River	Major	West Virginia	Braxton	74.8	110.5	Western-Plateaus Region	4002	13277	78	0.1	NA	NA	0.1	2.7	NA	NA	NA	2.7	3.2	6.6	C	5
Stonecoal Run	Intermediate	West Virginia	Braxton	76.7	0.4	Western-Plateaus Region	66	299	170	9.7	NA	NA	9.7	1.3	NA	NA	NA	1.3	11.6	2.9	F	2.9
UNT to Little Kanawha River	Intermediate	West Virginia	Braxton	77.6	0.7	Western-Plateaus Region	97	428	135	4.6	NA	NA	4.6	0.0	NA	NA	NA	0.0	5.5	2.9	F	2.9
UNT to Left Fork Holly River	Intermediate	West Virginia	Braxton	79.7	1.2	Central-Mountains Region	82	345	98	3.9	NA	NA	3.9	2.0	NA	NA	NA	2.0	4.7	2.9	E	2.9
Left Fork Holly River	Intermediate	West Virginia	Webster	81.6	55.4	Central-Mountains Region	2308	7368	96	2.1	NA	NA	2.1	0.0	NA	NA	NA	0.0	2.6	6.7	B	4
Oldlick Creek	Intermediate	West Virginia	Webster	82.3	10.9	Central-Mountains Region	559	2011	103	3.2	NA	NA	3.2	2.2	NA	NA	NA	2.2	3.8	3.3	D	3.3
Right Fork Holly Creek	Intermediate	West Virginia	Webster	84.1	56.6	Central-Mountains Region	2352	7498	86	3.0	NA	NA	3.0	0.0	NA	NA	NA	0.0	3.6	5.1	C	5

Waterbody Name	FERC Classification	Location			Drainage Basin		Estimated Peak-Flow Discharge (RI)		Particle Size	General Scour Estimates (ft)				Component Scour Estimates (ft)					Maximum Vertical Scour Estimate with 20% FS	Estimated Bedrock Depth (ft)[1]	Proposed Vertical Scour Mitigation Method (ID)[2]	Proposed Pipeline Burial Depth (ft)[3]
		State	County	MP	Drainage Area (sq. mi.)	Regression Region	2-year (cfs)	100-year (cfs)	Estimated D50 (mm)	Borah	Lacey	Blench	Maximum General	Bend	Bedform	Contraction	Local	Total Component				
Elk River	Major	West Virginia	Webster	87.3	269.2	Central-Mountains Region	9180	26112	95	0.1	NA	NA	0.1	0.0	NA	NA	NA	0.0	0.1	4.9	NA	3
UNT to Elk River	Intermediate	West Virginia	Webster	87.6	0.3	Central-Mountains Region	27	126	173	10.6	NA	NA	10.6	0.0	NA	NA	NA	0.0	12.8	6.7	F	6.7
UNT to Camp Creek	Intermediate	West Virginia	Webster	92.4	0.6	Central-Mountains Region	45	198	136	7.9	NA	NA	7.9	0.0	NA	NA	NA	0.0	9.5	6.7	F	6.7
UNT to Camp Creek	Intermediate	West Virginia	Webster	93.0	0.8	Central-Mountains Region	59	257	131	4.3	NA	NA	4.3	0.0	NA	NA	NA	0.0	5.2	6.7	E	7
Camp Creek	Intermediate	West Virginia	Webster	93.1	2.8	Central-Mountains Region	169	673	65	0.5	NA	NA	0.5	0.0	NA	NA	NA	0.0	0.6	8.7	NA	3
Amos Run	Intermediate	West Virginia	Webster	97.7	7.2	Central-Mountains Region	389	1441	76	0.7	NA	NA	0.7	0.8	NA	NA	NA	0.8	1.0	4.1	NA	3
Lost Run	Intermediate	West Virginia	Webster	98.6	2.8	Central-Mountains Region	169	673	61	1.9	NA	NA	1.9	0.0	NA	NA	NA	0.0	2.3	6.7	B	4
Laurel Creek	Intermediate	West Virginia	Webster	98.8	15.8	Central-Mountains Region	770	2695	88	3.5	NA	NA	3.5	0.0	NA	NA	NA	0.0	4.2	6.7	D	6
UNT to Birch River	Intermediate	West Virginia	Webster	104.9	0.7	Central-Mountains Region	50	218	98	4.7	NA	NA	4.7	0.0	NA	NA	NA	0.0	5.7	8.0	F	Alternative Mitigation
UNT to Strouds Creek	Intermediate	West Virginia	Webster	110.1	8.5	Central-Mountains Region	447	1638	85	0.9	NA	NA	0.9	4.1	NA	NA	NA	4.1	4.9	6.7	E	7
UNT to Barn Run	Intermediate	West Virginia	Nicholas	111.8	0.2	Central-Mountains Region	17	83	171	8.1	NA	NA	8.1	0.0	NA	NA	NA	0.0	9.7	6.7	F	6.7
Big Beaver Creek	Intermediate	West Virginia	Nicholas	114.3	29.0	Central-Mountains Region	1314	4397	113	3.6	NA	NA	3.6	0.0	NA	NA	NA	0.0	4.3	6.7	D	6
Big Beaver Creek	Intermediate	West Virginia	Nicholas	116.2	33.7	Central-Mountains Region	1496	4952	110	2.3	NA	NA	2.3	0.0	NA	NA	NA	0.0	2.8	2.0	B	2
Gauley River	Major	West Virginia	Nicholas	118.9	557.4	Central-Mountains Region	17329	46742	100	4.8	NA	NA	4.8	0.0	NA	NA	NA	0.0	5.7	12.1	F	Alternative Mitigation
UNT to Little Laurel Creek	Intermediate	West Virginia	Nicholas	120.3	1.0	Central-Mountains Region	67	289	136	7.1	NA	NA	7.1	0.0	NA	NA	NA	0.0	8.5	7.8	F	Alternative Mitigation
UNT to Little Laurel Creek	Intermediate	West Virginia	Nicholas	120.3	1.0	Central-Mountains Region	67	289	136	3.4	NA	NA	3.4	0.0	NA	NA	NA	0.0	4.0	4.6	D	6
Jims Creek	Intermediate	West Virginia	Nicholas	123.4	3.6	Central-Mountains Region	210	820	134	3.8	NA	NA	3.8	0.0	NA	NA	NA	0.0	4.6	7.1	E	7
Hominy Creek	Intermediate	West Virginia	Nicholas	126.9	48.2	Central-Mountains Region	2045	6594	131	5.1	NA	NA	5.1	0.0	NA	NA	NA	0.0	6.2	6.7	F	Alternative Mitigation
Sugar Branch	Intermediate	West Virginia	Nicholas	130.5	1.3	Central-Mountains Region	85	359	72	2.1	NA	NA	2.1	0.0	NA	NA	NA	0.0	2.5	6.7	B	4
UNT to Hominy Creek	Intermediate	West Virginia	Nicholas	131.5	1.2	Central-Mountains Region	81	343	1	NA	0.8	2.5	2.5	0.0	0.3	NA	NA	0.3	2.9	6.7	B	4
UNT to Hominy Creek	Intermediate	West Virginia	Nicholas	132.4	0.4	Central-Mountains Region	34	155	61	1.5	NA	NA	1.5	0.0	NA	NA	NA	0.0	1.8	6.7	A	3 (4 if Navigable Waterbody)
UNT to Meadow Creek	Intermediate	West Virginia	Greenbrier	140.4	7.0	Central-Mountains Region	378	1403	1	NA	2.5	4.2	4.2	0.8	0.3	NA	NA	1.1	5.1	6.7	E	7
Meadow River	Intermediate	West Virginia	Greenbrier	144.0	164.3	Central-Mountains Region	5965	17591	1	NA	5.7	4.8	5.7	4.2	0.6	NA	NA	4.8	6.8	6.7	F	6.7
Little Sewell Creek	Intermediate	West Virginia	Greenbrier	147.0	5.1	Central-Mountains Region	289	1097	2	1.1	3.0	1.8	3.0	2.7	0.0	NA	NA	2.7	3.6	6.7	C	5
Buffalo Creek	Intermediate	West Virginia	Greenbrier	154.9	3.7	Central-Mountains Region	217	844	0.06	NA	1.5	1.2	1.5	0.0	NA	NA	NA	0.0	1.8	6.7	A	3 (4 if Navigable Waterbody)
Lick Creek	Intermediate	West Virginia	Summers	162.9	1.0	Central-Mountains Region	70	300	273	18.6	NA	NA	18.6	0.0	NA	NA	NA	0.0	22.3	6.7	F	6.7
Hungard Creek	Intermediate	West Virginia	Summers	169.8	5.1	Central-Mountains Region	288	1094	109	1.0	NA	NA	1.0	1.5	NA	NA	NA	1.5	1.8	6.7	A	3 (4 if Navigable Waterbody)
Hungard Creek	Intermediate	West Virginia	Summers	170.0	11.4	Central-Mountains Region	582	2086	66	1.9	NA	NA	1.9	0.0	NA	NA	NA	0.0	2.2	6.7	A	3 (4 if Navigable Waterbody)
Greenbrier River	Major	West Virginia	Summers	171.4	1557.7	Central-Mountains Region	42501	106351	35	0.3	NA	NA	0.3	10.4	NA	NA	NA	10.4	12.5	6.6	F	6.6
Kelly Creek	Intermediate	West Virginia	Summers	172.7	7.5	Central-Mountains Region	405	1496	48	1.2	NA	NA	1.2	1.8	NA	NA	NA	1.8	2.2	6.7	A	3 (4 if Navigable Waterbody)
Wind Creek	Intermediate	West Virginia	Monroe	176.7	1.1	Central-Mountains Region	74	315	177	7.8	NA	NA	7.8	0.0	NA	NA	NA	0.0	9.4	3.3	F	3.3
UNT to Wind Creek	Intermediate	West Virginia	Monroe	176.7	0.2	Central-Mountains Region	16	79	188	10.2	NA	NA	10.2	0.0	NA	NA	NA	0.0	12.2	3.3	F	3.3
UNT to Stoney Creek	Intermediate	West Virginia	Monroe	177.4	1.6	Central-Mountains Region	105	433	72	2.8	NA	NA	2.8	0.1	NA	NA	NA	0.1	3.4	3.3	C	3.3
Stony Creek	Intermediate	West Virginia	Monroe	179.1	0.6	Central-Mountains Region	47	208	0.06	NA	0.9	1.5	1.5	0.0	NA	NA	NA	0.0	1.8	6.7	A	3 (4 if Navigable Waterbody)
Slate Run	Intermediate	West Virginia	Monroe	182.4	0.6	Central-Mountains Region	44	197	78	2.5	NA	NA	2.5	0.0	NA	NA	NA	0.0	3.0	6.7	C	5
Indian Creek	Intermediate	West Virginia	Monroe	182.8	108.5	Central-Mountains Region	4151	12618	20	0.3	NA	NA	0.3	0.0	NA	NA	NA	0.0	0.4	6.7	NA	3
UNT to Hans Creek	Intermediate	West Virginia	Monroe	184.2	0.8	Central-Mountains Region	55	238	101	3.0	NA	NA	3.0	0.0	NA	NA	NA	0.0	3.6	6.7	C	5
Hans Creek	Intermediate	West Virginia	Monroe	187.6	14.7	Central-Mountains Region	725	2551	106	3.8	NA	NA	3.8	0.2	NA	NA	NA	0.2	4.6	6.7	E	7

Waterbody Name	FERC Classification	Location			Drainage Basin		Estimated Peak-Flow Discharge (RI)		Particle Size	General Scour Estimates (ft)				Component Scour Estimates (ft)					Maximum Vertical Scour Estimate with 20% FS	Estimated Bedrock Depth (ft)[1]	Proposed Vertical Scour Mitigation Method (ID)[2]	Proposed Pipeline Burial Depth (ft)[3]
		State	County	MP	Drainage Area (sq. mi.)	Regression Region	2-year (cfs)	100-year (cfs)	Estimated D50 (mm)	Borah	Lacey	Blench	Maximum General	Bend	Bedform	Contraction	Local	Total Component				
Dry Creek	Intermediate	West Virginia	Monroe	192.0	4.3	Central-Mountains Region	249	958	87	0.9	NA	NA	0.9	0.0	NA	NA	NA	0.0	1.0	6.7	NA	3
Kimballton Branch	Intermediate	Virginia	Giles	198.9	1.5	Valley and Ridge	151	1169	225	14.1	NA	NA	14.1	0.9	NA	NA	NA	0.9	16.9	6.7	F	6.7
Stony Creek	Intermediate	Virginia	Giles	200.3	47.5	Valley and Ridge	1914	9867	164	6.2	NA	NA	6.2	4.0	NA	NA	NA	4.0	7.5	15.0	F	Alternative Mitigation
Stony Creek	Intermediate	Virginia	Giles	200.3	47.5	Valley and Ridge	1914	9867	164	6.2	NA	NA	6.2	4.0	NA	NA	NA	4.0	7.5	15.0	F	Alternative Mitigation
Stony Creek	Intermediate	Virginia	Giles	200.3	47.5	Valley and Ridge	1914	9867	164	6.2	NA	NA	6.2	4.0	NA	NA	NA	4.0	7.5	15.0	F	Alternative Mitigation
UNT to Little Stony Creek	Intermediate	Virginia	Giles	203.5	1.1	Valley and Ridge	124	990	227	11.3	NA	NA	11.3	0.3	NA	NA	NA	0.3	13.5	7.8	F	Alternative Mitigation
UNT to Little Stony Creek	Intermediate	Virginia	Giles	204.2	0.3	Valley and Ridge	46	429	47	1.7	NA	NA	1.7	0.0	NA	NA	NA	0.0	2.1	6.7	A	3 (4 if Navigable Waterbody)
Little Stony Creek	Intermediate	Virginia	Giles	204.3	19.8	Valley and Ridge	1008	5760	197	10.8	NA	NA	10.8	1.6	NA	NA	NA	1.6	13.0	6.7	F	6.7
UNT to Doe Creek	Intermediate	Virginia	Giles	205.8	0.9	Valley and Ridge	102	843	169	12.3	NA	NA	12.3	0.0	NA	NA	NA	0.0	14.7	6.7	F	6.7
Doe Creek	Intermediate	Virginia	Giles	206.7	3.8	Valley and Ridge	303	2101	128	5.7	NA	NA	5.7	0.0	NA	NA	NA	0.0	6.9	6.7	F	6.7
UNT to Sinking Creek	Intermediate	Virginia	Giles	207.8	0.2	Valley and Ridge	32	320	20	2.5	NA	NA	2.5	0.0	NA	NA	NA	0.0	3.0	6.7	C	5
Sinking Creek	Intermediate	Virginia	Giles	211.1	65.5	Valley and Ridge	2423	12022	58	2.3	NA	NA	2.3	0.0	NA	NA	NA	0.0	2.8	6.7	B	4
Greenbriar Branch	Intermediate	Virginia	Giles	212.9	2.7	Valley and Ridge	231	1672	101	6.8	NA	NA	6.8	0.0	NA	NA	NA	0.0	8.2	6.7	F	6.7
UNT to Sinking Creek	Intermediate	Virginia	Giles	216.6	0.1	Valley and Ridge	21	223	154	12.8	NA	NA	12.8	0.9	NA	NA	NA	0.9	15.4	6.7	F	6.7
Craig Creek	Intermediate	Virginia	Montgomery	219.5	5.1	Valley and Ridge	372	2495	64	2.2	NA	NA	2.2	2.3	NA	NA	NA	2.3	2.8	6.7	B	4
North Fork Roanoke River	Intermediate	Virginia	Montgomery	227.4	23.7	Valley and Ridge	1150	6434	59	0.5	NA	NA	0.5	0.0	NA	NA	NA	0.0	0.7	5.0	NA	3
Bradshaw Creek	Intermediate	Virginia	Montgomery	230.9	17.6	Valley and Ridge	925	5358	46	1.9	NA	NA	1.9	0.0	NA	NA	NA	0.0	2.2	6.7	A	3 (4 if Navigable Waterbody)
Roanoke River	Intermediate	Virginia	Montgomery	235.6	256.0	Valley and Ridge	6580	27801	71	1.8	NA	NA	1.8	6.3	NA	NA	NA	6.3	7.6	5.0	F	5
UNT to Bottom Creek	Intermediate	Virginia	Roanoke	240.8	0.4	Blue Ridge	72	913	11	7.3	NA	NA	7.3	0.0	NA	NA	NA	0.0	8.8	1.7	F	1.7
Bottom Creek	Intermediate	Virginia	Roanoke	242.4	2.9	Blue Ridge	284	2860	63	0.7	NA	NA	0.7	0.5	NA	NA	NA	0.5	0.9	1.7	NA	3
North Fork Blackwater River	Intermediate	Virginia	Franklin	249.8	5.9	Blue Ridge	472	4376	81	2.4	NA	NA	2.4	0.0	NA	NA	NA	0.0	2.9	6.7	B	4
UNT to North Fork Blackwater River	Intermediate	Virginia	Franklin	251.0	2.2	Blue Ridge	231	2405	120	4.6	NA	NA	4.6	0.0	NA	NA	NA	0.0	5.5	6.7	F	Alternative Mitigation
UNT to North Fork Blackwater River	Intermediate	Virginia	Franklin	251.9	1.8	Blue Ridge	206	2186	122	4.2	NA	NA	4.2	0.5	NA	NA	NA	0.5	5.1	6.7	E	7
UNT to Little Creek	Intermediate	Virginia	Franklin	256.0	1.0	Blue Ridge	132	1509	97	3.7	NA	NA	3.7	0.0	NA	NA	NA	0.0	4.4	6.7	D	6
Teels Creek	Intermediate	Virginia	Franklin	258.3	2.2	Blue Ridge	234	2432	50	1.3	NA	NA	1.3	0.0	NA	NA	NA	0.0	1.5	6.7	A	3 (4 if Navigable Waterbody)
Teels Creek	Intermediate	Virginia	Franklin	259.2	3.4	Blue Ridge	319	3156	50	0.5	NA	NA	0.5	2.6	NA	NA	NA	2.6	3.1	6.7	C	5
Teels Creek	Intermediate	Virginia	Franklin	259.4	3.5	Blue Ridge	325	3205	50	2.4	NA	NA	2.4	0.0	NA	NA	NA	0.0	2.9	6.7	B	4
Teels Creek	Intermediate	Virginia	Franklin	260.4	4.5	Blue Ridge	388	3717	53	1.5	NA	NA	1.5	2.7	NA	NA	NA	2.7	3.2	6.7	C	5
UNT to Teels Creek	Intermediate	Virginia	Franklin	260.9	5.0	Blue Ridge	419	3963	44	1.6	NA	NA	1.6	4.1	NA	NA	NA	4.1	4.9	6.7	E	7
Teels Creek	Intermediate	Virginia	Franklin	261.1	5.1	Blue Ridge	423	4000	42	1.1	NA	NA	1.1	2.3	NA	NA	NA	2.3	2.8	6.7	B	4
Teels Creek	Intermediate	Virginia	Franklin	261.9	5.5	Blue Ridge	450	4207	43	1.8	NA	NA	1.8	0.0	NA	NA	NA	0.0	2.1	6.7	A	3 (4 if Navigable Waterbody)
UNT to Teels Creek	Intermediate	Virginia	Franklin	262.1	6.4	Blue Ridge	498	4584	44	2.0	NA	NA	2.0	0.0	NA	NA	NA	0.0	2.5	6.7	B	4
Teels Creek	Intermediate	Virginia	Franklin	262.4	6.6	Blue Ridge	512	4686	45	1.8	NA	NA	1.8	1.9	NA	NA	NA	1.9	2.3	6.7	B	4
Little Creek	Intermediate	Virginia	Franklin	262.7	22.6	Blue Ridge	1222	9705	40	1.2	NA	NA	1.2	2.9	NA	NA	NA	2.9	3.5	6.7	C	5
Little Creek	Intermediate	Virginia	Franklin	263.4	25.1	Blue Ridge	1316	10328	30	0.4	NA	NA	0.4	0.0	NA	NA	NA	0.0	0.5	6.7	NA	3
UNT to Maggodee Creek	Intermediate	Virginia	Franklin	268.6	0.5	Blue Ridge	87	1060	55	3.1	NA	NA	3.1	0.0	NA	NA	NA	0.0	3.7	6.7	C	5
UNT to Maggodee Creek	Intermediate	Virginia	Franklin	269.0	0.8	Blue Ridge	118	1378	58	3.3	NA	NA	3.3	0.6	NA	NA	NA	0.6	3.9	6.7	D	6
Maggodee Creek	Intermediate	Virginia	Franklin	269.5	45.4	Blue Ridge	2004	14677	35	1.5	NA	NA	1.5	2.6	NA	NA	NA	2.6	3.1	6.7	C	5

Waterbody Name	FERC Classification	Location			Drainage Basin		Estimated Peak-Flow Discharge (RI)		Particle Size	General Scour Estimates (ft)				Component Scour Estimates (ft)					Maximum Vertical Scour Estimate with 20% FS	Estimated Bedrock Depth (ft)[1]	Proposed Vertical Scour Mitigation Method (ID)[2]	Proposed Pipeline Burial Depth (ft)[3]
		State	County	MP	Drainage Area (sq. mi.)	Regression Region	2-year (cfs)	100-year (cfs)	Estimated D50 (mm)	Borah	Lacey	Blench	Maximum General	Bend	Bedform	Contraction	Local	Total Component				
Blackwater River	Intermediate	Virginia	Franklin	269.8	165.0	Blue Ridge	5003	31548	64	2.8	NA	NA	2.8	8.7	NA	NA	NA	8.7	10.4	6.7	F	6.7
UNT to Blackwater River	Intermediate	Virginia	Franklin	270.3	0.1	Blue Ridge	25	376	64	4.7	NA	NA	4.7	0.0	NA	NA	NA	0.0	5.7	6.7	F	Alternative Mitigation
Foul Ground Creek	Intermediate	Virginia	Franklin	272.4	1.9	Blue Ridge	210	2221	33	0.5	NA	NA	0.5	0.0	NA	NA	NA	0.0	0.5	6.7	NA	3
UNT to Poplar Camp Creek	Intermediate	Virginia	Franklin	274.2	0.3	Blue Ridge	50	671	74	3.8	NA	NA	3.8	1.1	NA	NA	NA	1.1	4.6	6.7	E	7
UNT to Blackwater River	Intermediate	Virginia	Franklin	276.6	0.5	Blue Ridge	81	1001	54	1.7	NA	NA	1.7	0.0	NA	NA	NA	0.0	2.0	6.7	A	3 (4 if Navigable Waterbody)
UNT to Jacks Creek	Intermediate	Virginia	Franklin	277.5	0.1	Blue Ridge	32	456	48	3.8	NA	NA	3.8	0.0	NA	NA	NA	0.0	4.6	6.7	E	7
Strawfield Creek	Intermediate	Virginia	Franklin	282.4	0.8	Blue Ridge	118	1378	58	2.6	NA	NA	2.6	0.0	NA	NA	NA	0.0	3.2	3.3	C	5
Jonnikin Creek	Intermediate	Virginia	Pittsylvania	284.8	1.0	Piedmont	154	1407	59	1.3	NA	NA	1.3	0.0	NA	NA	NA	0.0	1.6	9.6	A	3 (4 if Navigable Waterbody)
UNT to Rocky Creek	Intermediate	Virginia	Pittsylvania	287.2	1.0	Piedmont	160	1456	1	NA	2.5	4.0	4.0	0.9	0.3	NA	NA	1.2	4.8	6.7	E	7
Pigg River	Intermediate	Virginia	Pittsylvania	289.2	340.0	Piedmont	4991	24970	0.06	NA	4.5	12.6	12.6	0.0	NA	NA	NA	0.0	15.1	6.7	F	6.7
Harpen Creek	Intermediate	Virginia	Pittsylvania	290.0	7.8	Piedmont	532	3925	1	NA	3.5	3.4	3.5	0.8	0.4	NA	NA	1.2	4.1	6.7	D	6
Harpen Creek	Intermediate	Virginia	Pittsylvania	290.6	3.1	Piedmont	309	2507	1	NA	1.5	3.5	3.5	0.0	0.3	NA	NA	0.3	4.2	6.7	D	6
Harpen Creek	Intermediate	Virginia	Pittsylvania	292.1	1.6	Piedmont	205	1785	48	2.0	NA	NA	2.0	0.0	NA	NA	NA	0.0	2.4	6.7	B	4
UNT to Harpen Creek	Intermediate	Virginia	Pittsylvania	292.5	0.2	Piedmont	61	652	1	NA	0.9	2.1	2.1	0.0	0.2	NA	NA	0.2	2.6	6.7	B	4
UNT to Cherrystone Creek	Intermediate	Virginia	Pittsylvania	294.3	1.5	Piedmont	203	1768	48	1.8	NA	NA	1.8	1.9	NA	NA	NA	1.9	2.3	6.7	B	4
Cherrystone Creek	Intermediate	Virginia	Pittsylvania	295.3	3.6	Piedmont	338	2696	51	0.6	NA	NA	0.6	0.5	NA	NA	NA	0.5	0.8	7.8	NA	3
UNT to Pole Bridge Branch	Intermediate	Virginia	Pittsylvania	296.7	4.5	Piedmont	382	2987	41	0.4	NA	NA	0.4	0.1	NA	NA	NA	0.1	0.5	6.7	NA	3
UNT to Little Cherrystone Creek	Intermediate	Virginia	Pittsylvania	301.5	1.1	Piedmont	169	1524	53	1.5	NA	NA	1.5	0.0	NA	NA	NA	0.0	1.8	6.7	A	3 (4 if Navigable Waterbody)

Notes:

[1] Bedrock depth estimates at major rivers conducted by Tetra Tech via seismic refraction and electrical resistivity.
Bedrock depth estimates at intermediate rivers conducted by Mountain Valley via desktop review of GIS data and soil resistivity data.

[2] Proposed Mitigation Measures:

NA: None Required; installed per 49 CFR 192.327 (PHMSA & DOT, 2011)

A: Pipeline buried with a minimum of 3-foot depth of cover
Pipeline buried with a minimum 4-foot depth of cover if considered a navigable waterbody

B: Pipeline buried with a minimum of 4-foot depth of cover

C: Pipeline buried with a minimum of 5-foot depth of cover

D: Pipeline buried with a minimum of 6-foot depth of cover

E: Pipeline buried with a minimum of 7-foot depth of cover

F: See mitigation options detailed in Sections 5.2 and/or 5.3

[3] Alternative mitigation option details in Sections 5.1.2 and 5.1.3.

Acronyms:

cfs:	cubic feet per second
FERC:	Federal Energy Regulatory Commission
FS:	factor of safety
ft:	feet
ID:	Identification
LDB:	left descending bank
mm:	millimeter
MP:	mile post
NA:	not applicable
sq. mi.:	square mile
RDB:	right descending bank
RI:	recurrence interval
UNT:	Unnamed Tributary

APPENDIX B: POTENTIAL LATERAL CHANNEL EROSION AND MITIGATION

Table B-1: Potential Lateral Channel Erosion and Mitigation

Waterbody Name	FERC Classification	Location			Historical Migration Zone (ft)[1]		Factor of Safety (ft)[2]	Proposed Horizontal Setback (ft)[3]	
		State	County	MP	Left Descending Bank	Right Descending Bank		Left Descending Bank	Right Descending Bank
North Fork Fishing Creek	Intermediate	West Virginia	Wetzel	0.7	19	16	7	26	23
Fallen Timber Run	Intermediate	West Virginia	Wetzel	2.3	21	116	27	48	143
Price Run	Intermediate	West Virginia	Wetzel	5.0	96	23	24	120	47
Sams Run	Intermediate	West Virginia	Wetzel	7.9	8	16	5	13	21
Little Tenmile Creek	Intermediate	West Virginia	Harrison	15.4	16	51	13	29	64
Little Rockcamp Run	Intermediate	West Virginia	Harrison	17.8	58	53	22	80	75
Rockcamp Run	Intermediate	West Virginia	Harrison	18.7	30	33	13	43	46
Grass Run	Intermediate	West Virginia	Harrison	20.8	34	49	17	51	66
UNT to Grass Run	Intermediate	West Virginia	Harrison	21.6	15	27	8	23	35
Indian Run	Intermediate	West Virginia	Harrison	23.0	15	32	9	24	41
Salem Fork	Intermediate	West Virginia	Harrison	25.9	35	31	13	48	44
Laural Run	Intermediate	West Virginia	Doddridge	34.8	15	15	6	21	21
Right Fork Freemans Creek	Intermediate	West Virginia	Lewis	42.5	14	25	8	22	33
Fink Creek	Intermediate	West Virginia	Lewis	44.7	16	27	9	25	36
Left Fork Freemans Creek	Intermediate	West Virginia	Lewis	45.8	24	15	8	32	23
Sand Fork	Intermediate	West Virginia	Lewis	55.1	38	19	11	49	30
Indian Fork	Intermediate	West Virginia	Lewis	58.5	20	16	7	27	23
UNT to Bens Run	Intermediate	West Virginia	Lewis	59.4	23	29	10	33	39
UNT to Indian Fork	Intermediate	West Virginia	Lewis	59.9	25	25	10	35	35
Second Big Run	Intermediate	West Virginia	Lewis	61.2	178	344	104	282	448
UNT to Second Big Run	Intermediate	West Virginia	Lewis	61.3	59	463	104	163	567
Clover Fork	Intermediate	West Virginia	Lewis	65.4	27	28	11	38	39
Barbecue Run	Intermediate	West Virginia	Braxton	67.4	8	38	9	17	47
Left Fork Knawl Creek	Intermediate	West Virginia	Braxton	68.7	20	26	9	29	35
Knawl Creek	Intermediate	West Virginia	Braxton	68.7	35	19	11	46	30
UNT to Falls Run	Intermediate	West Virginia	Braxton	71.6	8	34	8	16	42
Falls Run	Intermediate	West Virginia	Braxton	72.4	41	3	9	50	12
Little Kanawha River	Major	West Virginia	Braxton	74.8	58	53	22	80	75
Stonecoal Run	Intermediate	West Virginia	Braxton	76.7	22	13	7	29	20
UNT to Little Kanawha River	Intermediate	West Virginia	Braxton	77.6	31	6	7	38	13
UNT to Left Fork Holly River	Intermediate	West Virginia	Braxton	79.7	19	17	7	26	24
Left Fork Holly River	Intermediate	West Virginia	Webster	81.6	36	56	18	54	74
Oldlick Creek	Intermediate	West Virginia	Webster	82.3	22	64	17	39	81
Right Fork Holly Creek	Intermediate	West Virginia	Webster	84.1	85	34	24	109	58

Waterbody Name	FERC Classification	Location			Historical Migration Zone (ft)[1]		Factor of Safety (ft)[2]	Proposed Horizontal Setback (ft)[3]	
		State	County	MP	Left Descending Bank	Right Descending Bank		Left Descending Bank	Right Descending Bank
Elk River	Major	West Virginia	Webster	87.3	94	117	42	136	159
UNT to Elk River	Intermediate	West Virginia	Webster	87.6	108	16	25	133	41
UNT to Camp Creek	Intermediate	West Virginia	Webster	92.4	137	12	30	167	42
UNT to Camp Creek	Intermediate	West Virginia	Webster	93.0	273	63	67	340	130
Camp Creek	Intermediate	West Virginia	Webster	93.1	151	14	33	184	47
Amos Run	Intermediate	West Virginia	Webster	97.7	45	168	43	88	211
Lost Run	Intermediate	West Virginia	Webster	98.6	25	21	9	34	30
Laurel Creek	Intermediate	West Virginia	Webster	98.8	33	20	11	44	31
UNT to Birch River	Intermediate	West Virginia	Webster	104.9	18	159	35	53	194
UNT to Strouds Creek	Intermediate	West Virginia	Webster	110.1	16	28	9	25	37
UNT to Barn Run	Intermediate	West Virginia	Nicholas	111.8	23	16	8	31	24
Big Beaver Creek	Intermediate	West Virginia	Nicholas	114.3	33	44	15	48	59
Big Beaver Creek	Intermediate	West Virginia	Nicholas	116.2	36	55	18	54	73
Gauley River	Major	West Virginia	Nicholas	118.9	179	106	57	236	163
UNT to Little Laurel Creek	Intermediate	West Virginia	Nicholas	120.3	158	107	53	211	160
UNT to Little Laurel Creek	Intermediate	West Virginia	Nicholas	120.3	178	87	53	231	140
Jims Creek	Intermediate	West Virginia	Nicholas	123.4	51	237	58	109	295
Hominy Creek	Intermediate	West Virginia	Nicholas	126.9	40	43	17	57	60
Sugar Branch	Intermediate	West Virginia	Nicholas	130.5	34	19	11	45	30
UNT to Hominy Creek	Intermediate	West Virginia	Nicholas	131.5	13	15	6	19	21
UNT to Hominy Creek	Intermediate	West Virginia	Nicholas	132.4	72	6	16	88	22
UNT to Meadow Creek	Intermediate	West Virginia	Greenbrier	140.4	13	31	9	22	40
Meadow River	Intermediate	West Virginia	Greenbrier	144.0	47	49	19	66	68
Little Sewell Creek	Intermediate	West Virginia	Greenbrier	147.0	35	16	10	45	26
Buffalo Creek	Intermediate	West Virginia	Greenbrier	154.9	20	14	7	27	21
Lick Creek	Intermediate	West Virginia	Summers	162.9	23	38	12	35	50
Hungard Creek	Intermediate	West Virginia	Summers	169.8	160	423	117	277	540
Hungard Creek	Intermediate	West Virginia	Summers	170.0	30	163	39	69	202
Greenbrier River	Major	West Virginia	Summers	171.4	220	215	87	307	302
Kelly Creek	Intermediate	West Virginia	Summers	172.7	16	54	14	30	68
Wind Creek	Intermediate	West Virginia	Monroe	176.7	73	68	28	101	96
UNT to Wind Creek	Intermediate	West Virginia	Monroe	176.7	109	32	28	137	60
UNT to Stoney Creek	Intermediate	West Virginia	Monroe	177.4	29	33	12	41	45
Stony Creek	Intermediate	West Virginia	Monroe	179.1	11	8	5	16	13
Slate Run	Intermediate	West Virginia	Monroe	182.4	27	17	9	36	26
Indian Creek	Intermediate	West Virginia	Monroe	182.8	38	41	16	54	57
UNT to Hans Creek	Intermediate	West Virginia	Monroe	184.2	94	35	26	120	61
Hans Creek	Intermediate	West Virginia	Monroe	187.6	70	76	29	99	105

Waterbody Name	FERC Classification	Location			Historical Migration Zone (ft)[1]		Factor of Safety (ft)[2]	Proposed Horizontal Setback (ft)[3]	
		State	County	MP	Left Descending Bank	Right Descending Bank		Left Descending Bank	Right Descending Bank
Dry Creek	Intermediate	West Virginia	Monroe	192.0	11	16	5	16	21
Kimballton Branch	Intermediate	Virginia	Giles	198.9	63	19	16	79	35
Stony Creek	Intermediate	Virginia	Giles	200.3	505	323	166	671	489
Stony Creek	Intermediate	Virginia	Giles	200.3	505	323	166	671	489
Stony Creek	Intermediate	Virginia	Giles	200.3	505	323	166	671	489
UNT to Little Stony Creek	Intermediate	Virginia	Giles	203.5	39	27	13	52	40
UNT to Little Stony Creek	Intermediate	Virginia	Giles	204.2	257	18	55	312	73
Little Stony Creek	Intermediate	Virginia	Giles	204.3	35	240	55	90	295
UNT to Doe Creek	Intermediate	Virginia	Giles	205.8	23	26	10	33	36
Doe Creek	Intermediate	Virginia	Giles	206.7	12	194	41	53	235
UNT to Sinking Creek	Intermediate	Virginia	Giles	207.8	359	25	77	436	102
Sinking Creek	Intermediate	Virginia	Giles	211.1	26	33	12	38	45
Greenbriar Branch	Intermediate	Virginia	Giles	212.9	21	17	8	29	25
UNT to Sinking Creek	Intermediate	Virginia	Giles	216.6	22	88	22	44	110
Craig Creek	Intermediate	Virginia	Montgomery	219.5	30	10	8	38	18
North Fork Roanoke River	Intermediate	Virginia	Montgomery	227.4	28	36	13	41	49
Bradshaw Creek	Intermediate	Virginia	Montgomery	230.9	27	24	10	37	34
Roanoke River	Intermediate	Virginia	Montgomery	235.6	116	51	33	149	84
UNT to Bottom Creek	Intermediate	Virginia	Roanoke	240.8	70	63	27	97	90
Bottom Creek	Intermediate	Virginia	Roanoke	242.4	38	275	63	101	338
North Fork Blackwater River	Intermediate	Virginia	Franklin	249.8	19	22	8	27	30
UNT to North Fork Blackwater River	Intermediate	Virginia	Franklin	251.0	41	56	19	60	75
UNT to North Fork Blackwater River	Intermediate	Virginia	Franklin	251.9	44	36	16	60	52
UNT to Little Creek	Intermediate	Virginia	Franklin	256.0	22	25	9	31	34
Teels Creek	Intermediate	Virginia	Franklin	258.3	19	23	8	27	31
Teels Creek	Intermediate	Virginia	Franklin	259.2	25	31	11	36	42
Teels Creek	Intermediate	Virginia	Franklin	259.4	8	52	12	20	64
Teels Creek	Intermediate	Virginia	Franklin	260.4	58	19	15	73	34
UNT to Teels Creek	Intermediate	Virginia	Franklin	260.9	35	18	11	46	29
Teels Creek	Intermediate	Virginia	Franklin	261.1	44	31	15	59	46
Teels Creek	Intermediate	Virginia	Franklin	261.9	39	27	13	52	40
UNT to Teels Creek	Intermediate	Virginia	Franklin	262.1	30	12	8	38	20
Teels Creek	Intermediate	Virginia	Franklin	262.4	74	35	22	96	57
Little Creek	Intermediate	Virginia	Franklin	262.7	29	30	12	41	42
Little Creek	Intermediate	Virginia	Franklin	263.4	21	195	43	64	238
UNT to Maggodee Creek	Intermediate	Virginia	Franklin	268.6	8	53	12	20	65
UNT to Maggodee Creek	Intermediate	Virginia	Franklin	269.0	12	23	7	19	30
Maggodee Creek	Intermediate	Virginia	Franklin	269.5	33	44	15	48	59

Waterbody Name	FERC Classification	Location			Historical Migration Zone (ft)[1]		Factor of Safety (ft)[2]	Proposed Horizontal Setback (ft)[3]	
		State	County	MP	Left Descending Bank	Right Descending Bank		Left Descending Bank	Right Descending Bank
Blackwater River	Intermediate	Virginia	Franklin	269.8	38	49	17	55	66
UNT to Blackwater River	Intermediate	Virginia	Franklin	270.3	23	9	6	29	15
Foul Ground Creek	Intermediate	Virginia	Franklin	272.4	21	14	7	28	21
UNT to Poplar Camp Creek	Intermediate	Virginia	Franklin	274.2	58	12	14	72	26
UNT to Blackwater River	Intermediate	Virginia	Franklin	276.6	27	36	13	40	49
UNT to Jacks Creek	Intermediate	Virginia	Franklin	277.5	5	17	5	10	22
Strawfield Creek	Intermediate	Virginia	Franklin	282.4	16	25	8	24	33
Jonnikin Creek	Intermediate	Virginia	Pittsylvania	284.8	35	18	11	46	29
UNT to Rocky Creek	Intermediate	Virginia	Pittsylvania	287.2	31	51	16	47	67
Pigg River	Intermediate	Virginia	Pittsylvania	289.2	48	86	27	75	113
Harpen Creek	Intermediate	Virginia	Pittsylvania	290.0	67	24	18	85	42
Harpen Creek	Intermediate	Virginia	Pittsylvania	290.6	23	31	11	34	42
Harpen Creek	Intermediate	Virginia	Pittsylvania	292.1	23	89	22	45	111
UNT to Harpen Creek	Intermediate	Virginia	Pittsylvania	292.5	46	110	31	77	141
UNT to Cherrystone Creek	Intermediate	Virginia	Pittsylvania	294.3	30	22	10	40	32
Cherrystone Creek	Intermediate	Virginia	Pittsylvania	295.3	18	16	7	25	23
UNT to Pole Bridge Branch	Intermediate	Virginia	Pittsylvania	296.7	133	18	30	163	48
UNT to Little Cherrystone Creek	Intermediate	Virginia	Pittsylvania	301.5	16	23	8	24	31

Notes:

[1] Measured from current channel centerline.

[2] Factor of safety added to historical migration zone extent associated with both the left and right descending banks.

[3] Measured from current channel centerline.

FERC: Federal Energy Regulatory Commission

ft: feet

MP: mile post

Responses to Data Requests

Attachment DR3 Geology-2

Mountain Valley Pipeline Project

Mountain Valley PIPELINE

FIGURE NUMBER 1
Geophysical Investigation
Electric Resistivity Survey
Mount Tabor Variation

10-10-16

Draper Aden Associates
Engineering • Surveying • Environmental Services

Note: Location of Pulaski Fault approximated in this area.

Legend

- Areas for Additional Review
- Initial ER Performed (as of Oct. 4)
- Initial ER Not Performed (as of Oct. 4)
- MVP October 2016 Proposed Route with Mile Posts
- MVP FERC 4.0.0 Alignment

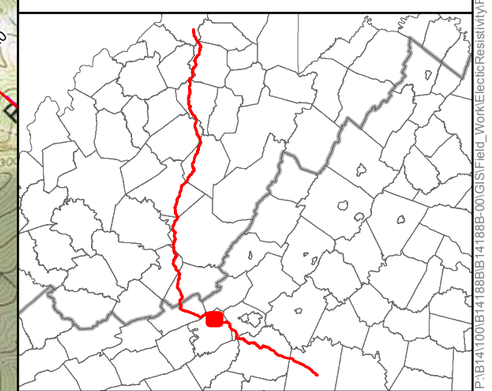

Faults from: Geologic map of the McDonalds Mill quadrangle, Virginia: Coiner, L.V., Spears, D.B., and Henika, W.S., 2015, Virginia Division of Mineral Resources 2015.

N

1:24,000

NAD 1983 UTM 17N

Service Layer Credits: Copyright© 2013 National Geographic Society, i-cubed

Document Path: P:\B14\100\B14188B\B14188B-00\GIS\Field_Work\ElectricResistivity\Fig-1 ER Status Oct4.mxd