June 1, 2017

Commonwealth of Virginia
Department of Environmental Quality
ATTN: Melanie D. Davenport
P.O. Box 1105
Richmond, Virginia 23218

Re: Request for Information for Developing and Evaluating Additional Conditions for Section 401 Water Quality Certification for Interstate Natural Gas Infrastructure Project

Dear Ms. Davenport:

Please see the following response by Mountain Valley Pipeline, LLC (Mountain Valley or MVP) in regards to the Commonwealth of Virginia, Department of Environmental Quality's (DEQ) May 19, 2017 request for information for developing and evaluating potential additional 401 Water Quality Certification conditions for the upland construction activities associated with the proposed Mountain Valley Pipeline Project (Project).

MVP prefaces this response by noting that the potential water quality impacts and mitigation measures for this Project have been subjected to an unprecedented level of scrutiny by various federal and state expert agencies. The Federal Energy Regulatory Commission (FERC) and numerous cooperating agencies have taken a hard look at potential water quality impacts at the granular level, as well as through cumulative impact analyses, in the course of a multi-year process of developing a Draft (soon to be Final) Environmental Impact Statement (DEIS) in compliance with the National Environmental Policy Act. That process has produced countless Project route revisions and mitigation measures to avoid and minimize water quality impacts, leading to the conclusion that "[n]o long-term or significant impacts on surface waters are anticipated as a result of the project." DEIS 4-116; *see also id*. 4-130 (concluding "impacts on wetlands would not be significant"); 4-84 (finding no "long-term or significant impacts on groundwater resources as a result of construction or operation of the projects.").

With respect to the Project's stream and wetland crossings, which are not part of the instant DEQ review, the U.S. Army Corps of Engineers and the Virginia Marine Resources Commission are presently reviewing a draft Joint Permit Application (JPA) that will ensure that any impacts are avoided and minimized, and, if necessary, compensated. The Corps may grant MVP's forthcoming request for authorization to proceed under Nationwide 12 only after it has independently concluded that the proposed stream and wetland crossings will have no more than minimal individual and cumulative adverse environmental effects (NWP Gen. Cond. 23) and that the crossings meet all other requirements of the Corps' nationwide permit, the Norfolk District's regional conditions, and the Commonwealth's 401 Water Quality Certification of Nationwide Permit 12. As the Commonwealth found in its April 7, 2017 Water Quality Certification, that process will provide reasonable assurance that the Project's stream and wetland crossing activities will not impair water quality.

Furthermore, MVP is presently working closely with DEQ on the review and approval of Project Specific

Standards and Specifications (S&S)[1] that will govern the erosion and sediment control and post-construction stormwater practices for all construction activities in Virginia. Following approval of the S&S, MVP will submit detailed site-specific erosion and sediment control plans (ESC Plans) to DEQ for the entire pipeline route in Virginia. Those ESC Plans will be reviewed and approved individually by DEQ following a public notice period in which affected localities and the public will be allowed to comment on the plans. It is our understanding that these steps have never been taken before in the Commonwealth for any other project. The final approved S&S and ESC Plans will ensure that upland construction activities will be conducted in compliance with all of the Commonwealth's erosion and sediment control and post-construction stormwater standards embodied in the Virginia Erosion and Sediment Control Law (Va. Code § 62.1-44.15:51 et seq.); Virginia Stormwater Management Act (Va. Code § 62.1-44.15:24 et seq.); and their respective implementing regulations.

This Project has been subjected to an extraordinary level of public and governmental review and impact mitigation. There is no doubt this additional review will confirm that the Project's construction and operation will be fully protective of the Commonwealth's water quality.

DEQ Information Request No. 1: <u>A complete listing of all types of project-related upland ground-disturbing activities that would occur within 50 feet of any perennial, intermittent, or ephemeral surface waters.</u>

Mountain Valley Response No. 1: Construction work areas include all facilities, access roads, staging areas, temporary pipe yards, contractor yards, and the construction Right-of-way (ROW). The construction ROW typically will include the 50-foot permanent pipeline ROW and an additional 75-foot temporary ROW for the length of the Project. The Project's limits of disturbance (LOD) will typically consist of a 125-foot-wide construction corridor for the majority of the Project. At waterbody and wetland crossings, MVP will typically reduce to a 75-foot-wide construction corridor unless otherwise noted. Additional temporary workspace (ATWS) will be required in certain areas, including adjacent to road, wetland, and waterbody crossings, and areas for material and equipment staging and topsoil segregation. Additional construction components will include temporary contractor yards and pipe storage yards.

Cross-country pipeline construction typically proceeds in an assembly line fashion, with multiple stages of construction occurring simultaneously at different locations to minimize the time needed to complete the project. The stages of construction include: survey and planning, mowing and clearing, grubbing and grading, trenching, pipe assembly (including stringing, bending, welding, testing, coating, and lowering-in), backfilling, final grading, and restoration. After construction is completed, all work areas will be restored with a perennial vegetative cover, unless specifically directed otherwise by the landowner or permit conditions. Following permanent stabilization, temporary work areas will be returned to pre-construction land uses.

The following information is a summary of the earth disturbance activities and includes a discussion on the erosion and sediment best management practices (BMPs) that will be included with the Project. The BMPs will be installed as a first step in any land disturbance activity (LDA) and will be made functional before upslope land disturbance takes place. Any of the upland construction activities described below may occur within 50 feet of a surface water at some location along the Project route.[2]

---

[1] The S&S was submitted to DEQ for review on April 17, 2017. A revised version was submitted on May 19, 2017 that addressed a number of comments made by DEQ staff. References to the S&S in this response refer to the May 19 revision.

[2] As is detailed in the S&S and draft JPA, different or additional measures may be taken for activities that occur within a stream or wetland.

- **Mowing and Clearing**:[3] The initial mechanized stage of construction involves the clearing of brush, trees, and vegetation from the ROW. Vegetation will be cut off at ground level, and un-merchantable timber (e.g., brush, stumps, slash and tree tops) will be disposed of by chipping and blowing chips off LOD in upland areas (landowner approval required), windrowing, or by burning (if allowed). Burning will only be conducted if appropriate permit approvals are received and, if an MVP contractor proposes burning, the activity is authorized by Mountain Valley. Merchantable timber will be cut and stacked along the outboard edge of the construction LOD in upland areas as directed by the landowner ROW agreements and approved by Mountain Valley Construction Supervisor. Tree tops and brush may be chipped and spread (blown) uniformly onto undisturbed forest land adjacent to the disturbed ROW if allowed per landowner agreement. Alternately, if wood chips generated from land clearing activities are scattered along the edge of the ROW, the chips will be spread a maximum of 1 ton/acre and an additional application of 11 pounds of nitrogen per ton of wood chips (in a slow-release fertilizer form) will be made to affected areas, in accordance with the FERC Plan and Procedures. This facilitates the quick establishment of vegetation.

- **Grubbing and Grading**: The grading operation involves grubbing of stumps, stockpiling topsoil where applicable, and leveling the construction ROW to create a safe operating area for equipment, employees and vehicles. Topsoil and subsoil disturbed during grading operations will be stored separately and will not be mixed with foreign material (e.g., stumps and slash). Grading and grubbing will be conducted by a dedicated construction team at sensitive resources (e.g., wetlands and waterbodies or residential developments). To minimize the length of time sensitive areas are affected, these areas will not be graded and grubbed until the contractor is prepared to complete all other construction activities at that site (e.g., trenching, pipe assembly) in the shortest practicable time.

  Topsoil will be segregated in all areas of the Project including pastureland, upland forested areas, residential areas, meadowlands, wetlands without standing water or saturated soil, areas requested by the landowner, or where directed by the Environmental Inspector (EI). The topsoil will be stored separately from trench subsoil and replaced on top of the subgrade during final grading. In agricultural lands and upland forested areas, topsoil will be stripped from either the full LOD (using additional temporary ROW to store the topsoil in this case) or from the trench line and subsoil storage area. During construction, topsoil storage piles shall be stabilized or protected with sediment trapping measures in accordance with the approved S&S. At least 12 inches of topsoil (where available) will be segregated in areas with deep soils. Where soils are shallow, every effort will be made to segregate the entire topsoil layer. In residential areas, topsoil replacement (i.e., importation of topsoil) is an acceptable alternative to topsoil segregation. Topsoil may not be used to fill sandbags or to pad the pipe.

- **Access Roads**: Mountain Valley will utilize both existing roads and newly constructed roads to facilitate implementation of the Project. Typical road widths will be 25-feet but may require temporary widening to facilitate use by large equipment and pipe delivery trucks. Existing roads

[3] Although mowing and clearing does not involve ground disturbance, it is included in this list of upland construction activities for the sake of completeness.

will be maintained with minor grading and gravel dressing (as needed) to maintain the road surface. Temporary BMPs will be installed in accordance with the DEQ-approved S&S and ESC Plans.

Newly constructed temporary access roads will be installed in accordance with the Project's S&S and ESC Plan terms and conditions. Following completion of the Project, temporary access roads will be returned to pre-existing contours and stabilized with permanent vegetation. Temporary BMPs will be maintained on temporary access roads throughout the Project until the disturbed area is restored and permanently stabilized with vegetation. Once the area has been permanently stabilized, the temporary BMPs will be removed and properly disposed. Existing dirt roads, logging roads, and two-track or vegetated agricultural roads will be returned to their pre-construction conditions. No new roads will be constructed unless prior approval has been received from the appropriate agencies.

New access roads that are required for permanent operation of the Project will be installed in accordance with the Project's S&S and ESC Plan terms and conditions. Permanent roads will be installed for construction use and will remain in place for operation of the facilities. Permanent stormwater controls (as needed) will be designed in accordance with the terms and conditions of the S&S.

- **Trenching**: The trenching operation consists of excavating the trench for the pipeline, and is typically accomplished with an excavator or a rotary wheel-ditching machine. In areas where soft rock or hard pans are present, a tractor-mounted ripper or excavator mounted hammer may be used to break and loosen consolidated material. Loosened material will then be removed with an excavator. The ditch will be excavated to a minimum practicable width for excavation stability; additional width will be excavated to meet safety standards when work will occur within the excavation such as at tie-ins, bore pits, valve settings, etc. Trench depths are typically between 5.5 and 9 feet. In areas where mechanized means of rock removal is unsuccessful, blasting may be used as needed. Mountain Valley prepared a General Blasting Plan, which is discussed later as a response to the DEQ's information request. Excavated material will be placed on the uphill side of the trench unless doing so is impracticable at the location and DEQ has granted a variance in the approved ESC Plan. All ESC measures will be maintained in good working and will be regularly inspected, repaired, replaced, and/or upgraded as necessary.

- **Pipe Assembly**: Most pipe assembly activities do not require any additional ESC measures; however, all ESC measures will be maintained in good working order where pipe assembly is being conducted. The trench will be cleared of debris and dewatered prior to lowering in pipe or equipment. Water from dewatering operations will be filtered through an approved filter bag that will comply with manufacturer's recommendations for inspection and maintenance, passed through a DEQ standard dewatering structure, and released to an upland area in a manner that does not result in accelerated erosion or adversely affect off-site property. Pipe assembly will be conducted expeditiously to minimize the time the trench is left open.

- **Backfilling**: This operation follows pipe installation and generally consists of replacing the material excavated from the trench. In areas where topsoil has been segregated, the subsoil will be replaced first, and the topsoil will be replaced during final grading. Backfilled trench material will be compacted to stabilize the trench. ESC measures will remain in place for this activity.

- **Final Grading**: This task will be completed no later than 20 calendar days after backfilling (10 calendar days in residential areas), soil and weather conditions permitting. These durations may be extended in locations where it is necessary to maintain a travel lane for access to other portions of the Project. The ROW will be cleared of construction debris, re-graded to pre-construction contours, and topsoil will be replaced. ROW diversions, such as Temporary Slope Breakers/Temporary Right-of-Way Diversion will be installed according to the S&S. It is worth noting that all temporary erosion and control barriers (silt fence, compost filter sock, etc) will remain in place until replaced by permanent BMPs, or when a ground cover that is uniform, mature enough to survive, and will inhibit erosion is achieved. In rotated and permanent cropland and pastures, residential areas, and other areas as stipulated by the Construction Supervisor, excess rock greater than four (4) inches in diameter will be removed from at least the top 12 inches of soil to the extent practicable. After final grade is achieved, the size, density, and distribution of rock on the construction work area should be similar to adjacent areas not disturbed by construction. The landowner may approve other rock size provisions in writing.

- **Temporary Stabili**zation: When acceptable final grade cannot be achieved (e.g., during winter or early spring construction), when permanent seeding cannot be applied due to adverse soil and weather conditions, or any time a denuded area will remain idle for more than 14 calendar days, temporary seeding will be applied to the rough graded area in accordance with the S&S. BMPs will be monitored and maintained until conditions improve and final cleanup can be completed in the next recommended planting window.

- **Soil Compaction Mitigation**: MVP will disc areas disturbed during construction activities to facilitate revegetation of the ROW. This will include discing subsoil to a depth of 4-6” prior to returning topsoil to the ROW. Topsoil will then be disced prior to seed and mulch application. Severely compacted areas may require additional de-compaction activities to be employed on an as needed basis using a plow or other deep tillage implement.

  Following discing, seed and mulch will be applied to the prepared seedbed. In lieu of anchoring mulch to the topsoil using tracked equipment, MVP would utilize an agricultural crimper to minimize potential for excessive compaction to occur. As an alternative option in agricultural areas, arrangements can be made with the landowner to plant and plow under a "green manure" crop, such as alfalfa, to decrease soil bulk density and improve soil structure. If subsequent construction and cleanup activities result in further compaction, additional tilling may be required.

  Restored soils will tested for compaction throughout the Project as necessary in areas disturbed by construction activities. Compaction testing locations will be determined by the MVP LEI/EI during restoration activities. Tests will be conducted on the same soil type under similar moisture conditions in undisturbed areas immediately adjacent to the Project site to identify approximate pre-construction conditions. A cone penetrometer or other appropriate devices will be used to conduct tests as necessary.

- **Restoration**: This process includes permanent soil stabilization measures. A permanent vegetative cover will be established on all disturbed areas of the ROW not otherwise permanently stabilized. Restoration will promptly follow final grading to take advantage of soil scarification resulting from

grading, and will be completed within seven (7) calendar days of final grading, weather and soil conditions permitting.

The following information provides a brief summary of the temporary BMPs that will be used throughout the project area. A detailed discussion, include detailed drawings are included in the S&S which is currently under review at the DEQ. The final version will be provided when approved. Locations of these temporary BMPs will be identified on the DEQ-approved ESC Plans.

- **Construction Entrances**: A rock construction entrance will be installed at any point where construction equipment leaves the ROW and enters a paved public road or other paved surface. This will mitigate the trackout of sediment from the Project area.

- **Sediment Barriers**: Sediment barriers such as silt fence or brush barrier will be used to temporarily intercept and detain small amounts of sediment from disturbed areas of limited extent and to decrease the velocity of sheet flows. Temporary sediment barriers will be installed at the base of slopes adjacent to road crossings until vegetation disturbed by construction has been reestablished.

- **Temporary Diversion Dike**: A temporary diversion dike is intended to divert overland sheet flow to a stabilized outlet or a sediment-trapping facility during construction and during the establishment of permanent stabilization on sloping disturbed areas. When used at the top of a slope, the structure protects exposed slopes by keeping upland run-on (sheetflow) from entering the disturbed area. When used at the base of a slope, the structure protects downslope areas by diverting sediment laden runoff to a sediment trapping facility.

- **Temporary slope breakers, ROW Diversions or Waterbars**: Temporary slope breakers, ROW diversions or waterbars are intended to reduce runoff velocity and divert storm water off the construction ROW. Temporary diversions may be constructed of soil from the site, gravel (provided the gravel can be completely removed at the end of construction), or with a line of staked bales (see sediment barriers described above) or sand bags where conditions prohibit using compacted soil (e.g., on a rocky slope with insufficient soil to create interceptor diversions).

- **Dewatering Structure**: A dewatering structure filters sediment from water pumped out of excavations. The style most commonly used for pipeline construction is an above-grade pit made of staked bales, filter fabric, and gravel; however, other structures (or a combination thereof) are available. In certain instances, a pumped water filter bag will be placed in the dewatering structure to provide additional sediment control.

- **Rock Check Dam**: Rock check dams are used in drainage ditches and small channels on and around disturbed areas until final stabilization is complete. They should be installed immediately following construction of the drainage ditch, but prior to any adjacent disturbance.

- **Outlet Protection**: Outlet protection is used to prevent scour at stormwater outlets, to protect the outlet structure, and to minimize the potential for downstream erosion by reducing the velocity and energy of concentrated stormwater flows.

Follow-up inspections of all disturbed areas after the first and second growing seasons will be conducted to determine the success of revegetation. In general, revegetation cannot be determined to be fully established until it has been maintained for one full year after planting. Permanent vegetation shall not be considered established until a ground cover is achieved that is uniform, mature enough to survive and will inhibit erosion. If vegetative cover and density is not acceptable or there are excessive noxious weeds after two full growing seasons, a professional agronomist will determine the need for additional restoration measures (such as fertilizing or reseeding). When necessary, the measures recommended by the agronomist will be implemented. In agricultural areas, revegetation shall be considered successful when upon visual survey, crop growth and vigor are similar to adjacent undisturbed portions of the same field, unless the easement agreement specifies otherwise.

DEQ Information Request No. 2: Identification of all perennial surface waters within 50 feet of the limits of disturbance that are (a) designated as wild/stocked trout streams, (b) identified as endangered/threatened species waters, (c) designated for public water supply, (d) classified as Tier 3 streams, and/or (e) subject to an established total maximum daily load (TMDL) (identifying the pollutant of concern, including sediment, nutrients, or other).

Mountain Valley Response No. 2: Table 1 (Appendix 1) provides a listing of all perennial streams in the LOD and within 50 feet of the LOD, with one of the designations listed above.

Designated wild/stocked trout streams were identified using the Cold Water Streams Survey (CWSS) – trout streams ArcGIS shapefile available on the Virginia Department of Game and Inland Fisheries (VDGIF) website (VDGIF 2017). The identification of endangered/threatened species waters was based on field surveys and agency coordination with U.S. Fish and Wildlife Service (USFWS) and VDGIF. The identification of streams designated for public water supply was based on the 2014 305(b)/303(d) Water Quality Assessment Integrated Report GIS Data accessible on the Virginia Department of Environmental Quality (DEQ) website (DEQ 2017a[4]). The identification of Tier 3 streams was based on Tier 3 streams identified on the Exceptional State Waters (Tier III) list accessible on the DEQ website (DEQ 2017b[5]). The identification of streams within TMDL watersheds with established TMDL's was based on the TMDL IP Watersheds Geodatabase available on the DEQ website (DEQ 2017c[6]).

DEQ Information Request No. 3: Permanent right-of-way maintenance measures relevant to minimizing erosion or other water quality impacts.

Mountain Valley Response No. 3: DEQ is currently reviewing Mountain Valley's S&S. The S&S identifies specific erosion and sediment control (ESC) best management practices (BMPs) to be implemented during construction and operation of the Project. In summary, final grading will be completed no later than 20 calendar days after backfilling (10 calendar days in residential areas). This timeframe is dependent on soil and weather conditions. Although it is not required by DEQ, Mountain Valley will install permanent slope breakers throughout the Project except residential lawns and agricultural

---

[4] DEQ. 2017a. 2014 305(b)/303(d) Water Quality Assessment Integrated Report. http://www.deq.virginia.gov/Programs/Water/WaterQualityInformationTMDLs/WaterQualityAssessments/2014305(b)303(d)IntegratedReport.aspx. Accessed January 2017.

[5] DEQ. 2017b. Exceptional State Waters (Tier III). http://www.deq.virginia.gov/Programs/Water/WaterQualityInformationTMDLs/WaterQualityStandards/ExceptionalStateWaters(TierIII).aspx. Accessed January 2017.

[6] DEQ. 2017c. TMDL IP Watersheds Geodatabase. VEGIS Datasets. http://www.deq.virginia.gov/ConnectWithDEQ/VEGIS/VEGISDatasets.aspx. Accessed May 2017.

(cultivated) areas. Section 2.8, Page 13 of the S&S discusses the Final Grading and Permanent Slope Breakers. The construction detail for the permanent slope breaker is illustrated on Typical Construction Detail MVP-17 and MVP-18 (Section 2.8.2, Page 14). The permanent slope breakers are designed to reduce runoff velocity and divert water from the construction right-of-way (ROW). Reducing the velocity and diverting the water minimizes potential water quality impacts by reducing the erosive forces and removing water from the recently restored construction area.

Mountain Valley is partnering with the Wildlife Habitat Council (WHC), a nonprofit organization dedicated to assisting corporations, conservation organizations, and individuals with restoration and enhancement of wildlife habitat. The WHC is working with Mountain Valley on their commitment towards restoration of the Project ROW and establishment of perennial vegetation using native seed mixes created in collaboration with local seed supplier, Ernst Conservation Seeds, Inc. State-specific seed mixes recommended for Mountain Valley are summarized in MVP Typical Construction Detail MVP-ES11.1 through 11.7. These seed mixes incorporate recommendations received during the public comment period on the Draft Environmental Impact Statement (FERC Docket CP16-10-000) from the US Fish and Wildlife Service (USFWS), US Forest Service, VA Department of Conservation and Recreation, Wildlife Habitat Council and Mountain Valley's threatened and endangered species consultant. These seed mixes will be applied along the Project's ROW except where landowners request a specific seed mix and on state or federal land where agencies request specific seed mixes.

Section 6.0 of the S&S discusses the maintenance of permanent right of way areas. In summary, at least two growing seasons are required to determine if revegetation has been successfully established. Revegetation will not be fully established until it has been maintained for one full year after planting. Permanent vegetation shall not be considered "established" until a ground cover is achieved that is uniform, mature enough to survive and will inhibit erosion. If vegetative cover and density is not acceptable or there are excessive noxious weeds after two full growing seasons, a professional agronomist will determine the need for additional soil amendments (such as fertilizing or reseeding) (S&S Section 6.1, Page 44). In addition to the information in the S&S, the project will also be monitored in accordance with the FERC Plan and Procedures.

Vegetation maintenance adjacent to waterbodies and wetlands will be limited to allow a riparian strip at least 25-feet wide[7] to permanently revegetate with native plant species across the entire ROW. This is measured from the waterbody's ordinary high water mark, However, to facilitate periodic pipeline corrosion/leak surveys, a corridor centered on the pipeline and up to 10 feet wide will be mowed annually, and may be maintained in an herbaceous state. In addition, trees that are located within 15 feet of the pipeline and are greater than 15 feet in height may be cut and removed from the ROW.

The S&S will be provided once it is approved.

DEQ Information Request No. 4: <u>A plan detailing measures to be used to protect water quality from acid forming materials.</u>

Mountain Valley Response No. 4: Mountain Valley has prepared an Acid Forming Materials Identification and Mitigation Plan (AFMP). The Plan was provided to FERC on May 8, 2017 and also provided to the DEQ as a supplement to Mountain Valley's S&S. The AFMP is included in Appendix 2.

Acid-producing rock and soils may be encountered during land clearing and excavation in the construction

[7] S&S identify a riparian strip at least 35-feet wide. Please note that the 35-feet reference is a typo within the S&S and Mountain Valley is coordinating with the DEQ to correct this information. The 25-feet riparian strip is based on the FERC's Wetland and Waterbody Construction and Mitigation Procedures

ROW if these areas are underlain by acid-forming materials (AFM) that contain sulfide minerals susceptible to producing acidic run-off during weathering. AFM may be found in certain types of bedrock, coal seams, and the bedrock or spoils found at active and abandoned mined areas. For example, in Virginia, Mountain Valley identified the Millboro and Needmore Shales in Montgomery County, and the Ashe Formation in Franklin County, as potential AFM.

The AFMP directs that during construction, Mountain Valley will identify areas that require specific evaluation for potential AFM, and coordinate applicable and prescribed mitigation measures. In the AFMP, Mountain Valley commits to deploying construction inspectors in areas where AFM is present to confirm that BMPs are implemented to prevent acid run-off conditions from forming in the workspaces, both during construction and after restoration is completed.

The management strategy involves the following: evaluating desktop information of potential AFM from published sources and previous experiences; verifying the presence of the AFM in the project area through field tests; applying agricultural lime to exposed AFM in trenches and spoil piles generated during excavation; and/or applying agricultural lime to AFM spoils on exposed corridor surfaces or in fill areas to prevent runoff or leaching of AFM.

The AFMP also identifies mitigation measures to be implemented where appropriate to prevent storm water run-on and infiltration to the excavation and final backfilled trench in AFM areas, which will prevent run-off and discharge of low-pH water. Mountain Valley will segregate excavated AFM and stabilize these materials chemically by mixing with lime (proportions to be determined through materials testing prescribed in the AFMP). Mountain Valley will complete construction expeditiously in areas where acid-forming soils and rock are found, limiting the amount of time the resulting excavation and excavated materials are exposed to surface conditions. Mountain Valley will coat the pipe in fusion-bonded epoxy to prevent any damage or deterioration to the pipeline that could be in contact with AFM. Mountain Valley will deploy inspectors during all phases of construction who are trained in the identification and mitigation of AFM. These inspectors will document the implementation of BMPs prescribed in the AFMP.

DEQ Information Request No. 5: Protections to be employed to prevent any potential impacts associated with hydrostatic testing or dust control activities.

Mountain Valley Response No. 5:

Hydrostatic Testing

In Virginia, Mountain Valley will obtain the hydrostatic test water from municipal sources. The hydrostatic test design seeks to minimize the amount of water required from each source and the volume of water that will need to be released. Water will be injected into a segment of the pipeline. It will then be pushed into the next test section, which has been chosen to be smaller than the first. By this method, no additional water will be needed within a construction spread, since the large volume initially drawn will be "pushed" to increasing smaller sections that require less volume.

Hydrostatic test water will be released to upland areas through an energy dissipating dewatering device in accordance with STD & SPEC 3.26 Dewatering Structure and Typical Construction Detail MVP-ES2 Pumped Water Filter Bag. The dewatering structures will be sized to accommodate the rate and volume of release. These activities will be monitored and regulated to prevent erosion and over pumping of the dewatering structures. Releases will be stopped when necessary to perform maintenance of the dewatering structures and ensure they remain in good working order. No hydrostatic test releases will occur directly to waterbodies, wetlands, or other identified sensitive areas.

Because Mountain Valley does not intend to release any hydrostatic test water to waterbodies, the Project does not require coverage under a Virginia Pollutant Discharge Elimination System (VPDES) permit. Nevertheless, as an additional BMP, all upland releases of hydrostatic test water will be conducted in accordance with the sampling, monitoring, and effluent limit conditions identified in the Virginia General Permit No. VAG83 (Discharges from Petroleum Contaminated Sites, Groundwater Remediation, and Hydrostatic Tests) (pH of 6.0-9.0, no more than 15.0 mg/l petroleum hydrocarbons and 0.011 total residual chlorine). Since no surface water withdrawals or direct discharge to waterbodies will occur, no impacts to the average daily stream flow or aquatic resources are anticipated.

Fugitive Dust Control Plan

In regards to dust control measures, Mountain Valley submitted a Fugitive Dust Control Plan (FDCP) to the FERC in January 2017. The FDCP is located in Appendix 3 and was developed to minimize visible fugitive dust emissions at or in proximity to the worksite. Fugitive dust is generated by the mechanical disturbance of granular material exposed to air. Dust from open sources is termed "fugitive" because it is not discharged to the atmosphere in a confined flow stream.

The primary approach to control fugitive dust is wet suppression, using water. The amount of water required to sufficiently control fugitive dust emissions is dependent on the characteristics of materials (e.g., surface moisture content), ambient conditions (e.g., rainfall, humidity, temperature), activities occurring in the area (e.g., vehicle traffic, vehicle weight, speeds), etc. The contractors will have one or more water trucks available per spread that will load water from approved sources to spray areas for dust control. Water will not be withdrawn from streams for dust control. Disturbed and trafficable areas will be kept sufficiently damp during working hours in dry conditions to minimize wind-blown or traffic-generated dust emissions (FDCP, Section 4.0, Page V-3). All disturbed areas will be protected with the appropriate erosion and sediment control BMPs and would be able to handle any runoff associated with fugitive dust control. However, the rate of water application will be sufficient to only suppress fugitive dust particles and will not be of such volume to create a runoff event.

The construction contractor may propose the use of tackifiers to reduce fugitive dust provided that the product to be utilized has been approved by the appropriate federal and state agencies where its application will occur. The construction contractor will detail the proposed use of any such substances in its dust control plan and provide copies of the material safety data sheets and application procedures to Mountain Valley for approval. All dust control products will be used in accordance with the manufacturers recommended application rates and frequencies. Typically, tackifiers used are DustFloc, RoadFloc, and Kodiak Super TACKMixes (FDCP, Section 5.0, Page V-5). Mountain Valley will require the Contractor to provide a list of dust control products, not identified above, for review and approval prior to use. Tackifers containing calcium chloride are not anticipated for use on the project.

DEQ Information Request No. 6: <u>A plan addressing how riparian buffers will be protected to the extent feasible during construction for additional protection of water quality.</u>

Mountain Valley Response No. 6: MVP has developed its route to avoid, the extent practicable, having its LOD in close proximity to streams, which effectively provides for riparian buffers. Wherever possible, MVP has will maintain a 100-foot natural vegetated buffer between the LOD and a waterbody.

Buffers will be used for all upland construction near stream and wetland crossings where possible as well. To minimize potential impacts to waterbody and wetland crossings, Mountain Valley reduced the construction limit of disturbance (LOD) at waterbody and wetland crossings from 125 feet to 75 feet to minimize impacts, where possible. This reduced LOD width will be extended 50 feet (where possible) from each side the stream or wetland crossing as an additional upland buffer and is illustrated on the

waterbody crossing details in the S&S. Waterbody and wetland crossings will be clearly marked in the field prior to the start of tree clearing activities. The resource crossing and associated buffer areas will be treated as separate construction entities, except during clearing activities, and efforts will be made to cross these areas during low flow. Once grubbing and grading begins, at a waterbody or wetland crossing, it will be actively conducted for consecutive days until the crossing is completed and the work area restored. Furthermore, staging areas for the stream crossings will be located outside the buffer areas and will be the minimum necessary to stage the stream crossing. No refueling, hazardous materials storage, equipment maintenance, or equipment parking will take place within 100 feet of the stream crossing. Equipment and vehicles will not be washed in any waterways.

Sediment barriers will be installed immediately after initial disturbance of the waterbody or adjacent upland in accordance with the DEQ approved ESC plan. Sediment barriers will be properly maintained throughout construction and reinstalled as necessary (such as after backfilling of the trench) until replaced by permanent erosion controls or restoration of adjacent upland areas is complete. Sediment barriers will be installed across the entire construction right-of-way at all waterbody crossings. Where waterbodies are adjacent to the construction right-of-way, sediment barriers will be installed along the edge of the construction right-of-way as necessary to contain spoil and sediment within the ROW. Trench plugs will be used at all waterbody crossings to prevent diversion of water into upland portions of the pipeline trench and to keep any accumulated trench water out of the waterbody. Trench plugs will be of sufficient size to withstand upslope water pressure. Permanent slope breakers will be installed 25 feet from all waterbody boundaries to further minimize potential for erosion to occur within the riparian buffer areas.

DEQ Information Request No. 7: A Spill Prevention Control and Countermeasure (SPCC) Plan.

Mountain Valley Response No. 7: In March 2017, Mountain Valley submitted a Spill Prevention, Control, and Countermeasure (SPCC) Plan and Unanticipated Discovery of Contamination Plan to the FERC. The plan has been developed to minimize impacts and protect sensitive environmental resources in the Project area. The SPCC Plan is included in Appendix 4 and includes the following information:

- **Waste Management**: Section 2.0 of the SPCC plan provides an overview and checklist to be used before each phase of construction begins at each spread. Each spread might require different chemicals and equipment with different fuel requirements that must be documented, accounted for, and contained. Also included at the end of this section are the Weekly Hazardous Materials and Waste Inspection Log for weekly inspection of hazardous materials and waste. This information provides a summary of the materials on site, their volumes, and inspection information.

- **Spills**: Section 3.0 of the SPCC Plan describes spill preparedness, prevention, and containment. Prior to construction, contractors and Mountain Valley personnel shall be trained in hazardous waste management procedures that will enable them to respond effectively to emergencies by familiarizing them with emergency procedures, equipment, and communication systems.

- **Karst Area Erosion and Sedimentation**: Section 4.0 of the SPCC Plan covers Karst Area erosion and sediment controls (ESC). The primary objectives for karst-specific ESC are to prevent erosion, overland flow, and sediment transport to water bodies and karst features during pipeline construction, and to prevent erosion, sedimentation, and flooding problems in karst areas after pipeline construction and land reclamation. The primary means to reduce risks for erosion, sedimentation, and flooding in karst terrain is to restore land surface grades to pre-construction characteristics and not significantly change the volume of surface water that enters a karst feature.

- **Contingency Plan and Emergency Procedures**: Section 5.0 of the SPCC Plan describes the

emergency response procedures that have been developed for the project to guide responses to fires, explosions, releases of oils or hazardous waste to the air, land, or waters of the state regardless of the quantity involved in the incident. This section also details the responsibilities of the Mountain Valley and Contractor Personnel, First Responders, and Emergency Coordinators; Spill clean-up procedures; waste disposal procedures; and cleaning procedures.

DEQ Information Request No. 8: Specific engineering and best management practices to be used in areas of steep slopes and slide prone areas.

Mountain Valley Response No. 8: Mountain Valley's Landslide Mitigation Plan (LMP) was developed to address areas of concern, such as steep slopes and slide prone areas, that were identified prior to construction. The LMP is located in Appendix 5 and contains site-specific mitigation measures and typical details to be employed during construction to minimize the risk of earth movement and specifies mitigation measures at predetermined locations along the pipeline. The mitigation measures are generally consistent with those recommended in the Interstate Natural Gas Association of America's (INGAA's) Mitigation of Land Movement in Steep and Rugged Terrain for Pipeline Projects published in May 2016, which presents best management practices for landslide mitigation in the Appalachian region. Construction will not be authorized until FERC has reviewed and approved the LMP. DEIS 5-21.

Landslides occur primarily in weathered bedrock or colluvial soil and within old landslide debris located on steep slopes. The potential landslide areas were identified by reviewing available historic aerial photographs, soils data, topographic maps, and field investigations. The basic strategies to protect against landslides and slope instability along the pipeline corridor during construction are stabilization, drainage improvement, and erosion and runoff control. In addition, construction operations will be staffed with geotechnical personnel.

Section 8.0 of the LMP identifies the specific areas that may be prone to landslides and includes the proposed mitigation measures. It is worth noting that these mitigation measures have been developed for use across the entire project and are not restricted to the specific areas identified in the LMP. Specific mitigation measures within the LMP are summarized as follows:

- **Excavation and/or Regrading of Upgradient Head Soils**: Regrading to a flatter slope upgradient of the pipeline excavation will increase the slope stability factor of safety by reducing the weight of soil at the top of the slope.

- **Bedrock Embedment**: Installing the pipeline completely within a bedrock trench will protect the pipeline integrity in the event of a surficial landslide.

- **Dewatering**: Dewatering a slope is often the most cost effective means to stabilize a slope and prevent future landslides. Saturated soil has an increased unit weight and higher pore water pressure, both of which negatively affect the slope stability factor of safety. To prevent soil from becoming saturated, runoff will be directed away from the potentially unstable slope and drains will outlet subsurface water.

- **Erosion and Runoff Control**: Typical erosion and sediment control BMPs will be implemented during pipeline construction and will be detailed in the Project plans. Installing additional erosion and sediment control measures will increase slope stability by minimizing soil saturation, as in dewatering.

BMPs that are recommended for slope stabilization are summarized as follows:

- **Berms**: Diversion berms will be used to intercept, divert, and convey surface runoff from steep slopes to decrease the chance of rill or gully erosion to occur which could weaken the stability of steep slopes.

The outlet of all diversion berms will be armored with riprap to act as an energy dissipater and prevent localized erosion.

- **Rock Outlet Protection (Riprap)**: Rock outlet protection (riprap) will be used at the outlets of trench drains, sidehill low-point drains, berms, culverts, etc., to control the velocity and potential for erosion of the storm water runoff.

- **Sidehill Low-Point Drain**: Sidehill low-point drains will be installed from the main pipeline trench at the upgradient side of a trench breaker to drain water out of the trench and outlet it to an area with rock outlet protection.

- **Trench Drain**: Trench drains will be installed on side slopes and steep slopes in order to dewater the uphill slope.

- **Water Bar (Broad-Based Dip)**: Water bars will be used across the right-of-way, sloped to drain water off of the pipeline right-of-way.

- **Trench breakers (Trench Plugs)**: Trench breakers constructed of sandbags will be used in trenches along pipes to control water flowing through the pipeline trench in order to prevent excessive amounts water from saturating and destabilizing the slope.

- **Hard Armor**: Existing drainage channels will be hard armored with riprap or articulated concrete block (ACB) as necessary to minimize slope saturation and erosion by stormwater, especially above the pipeline and in areas susceptible to future erosion.

The following measures are not currently anticipated but may be implemented during construction, as needed.

- **Buttressing**: An earth, rock, or riprap fill buttress may be installed in front of an unstable slope to increase the weight of the material at the toe of the slope, thereby increasing the slope stability factor of safety.

- **Reinforced Soil Slope**: Multiple layers of geogrid or other geosynthetics may be incorporated between compacted lifts of soil or crushed stone to increase the shear strength of the fill, thereby decreasing the risk of a slope movement.

- **Rockfall Protection (Fencing):** Protection measures such as rock fences, placement of concrete barriers, or creating catchment areas may be added where excavation is planned at the top of steep slopes to limit loose debris and protect downslope property or roadways.

- **Soil-Nail Stabilization**: Soil-Nail Stabilization is used to stabilize unstable soil slopes or allow for safe over-steepening (if required) of new or existing soil slopes. Tension-resisting steel elements will be inserted into holes in the soil surface and grouted or directly driven into the ground surface to anchor a steel cable or net system at the surface of the ground.

Please note that construction typical drawings for selected mitigation measures are also included in the LMP's Appendix.

DEQ Information Request No. 9: A Blasting Plan detailing measures to be used to protect water quality in connection with blasting activities.

Mountain Valley Response No. 9: In February 2017, Mountain Valley submitted a General Blasting Plan (GBP) to FERC. The GBP is included in Appendix 6 and outlines the procedures and safety measures that the contractor will adhere to while implementing blasting activities during the construction of the Project. The pipeline will be installed to allow a minimum cover of 36 inches in areas of shallow bedrock. However, according to US Department of Transportation Pipeline and Hazardous Materials Safety Administration (DOT PHMSA) Regulations in 49 CFR Chapter I, the pipeline can be installed to a depth of 18 inches in consolidated rock. In areas where unrippable subsurface rock is encountered, approved alternative methods of excavation will be evaluated including: rock trenching machines, rock saws, hydraulic rams, jack hammers, blasting, etc. Blasting for grade or trench excavation will be considered only after all other reasonable means of excavation have been evaluated and determined to be unlikely to achieve the required results. Mountain Valley may specify locations (foreign line crossings, nearby structures, etc.) where consolidated rock will be removed by approved mechanical equipment, such as rock trenching machines, rock saws, hydraulic rams, or jack hammers, instead of blasting. Areas where blasting may be required will be surveyed for features, such as karst terrain, structures, utilities, and wells. Before any blasting occurs, the Contractor will complete a project/site-specific blasting plan and provide it to Mountain Valley for review. No blasting will occur without prior approval of Mountain Valley.

The following information is located in Section 6 of the GBP and identify the precautions that will be implemented during blasting:

- Dissemination of blast warning signals in the area of blasting.
- Backfilling with subsoil (no topsoil to be used) or blasting mats or other approved methods.
- Blast warning in congested areas, in shallow water bodies, or near structures that could be damaged by fly-rock.
- Use of matting or other suitable cover, as necessary, to prevent fly-rock from damaging adjacent protected natural resources.
- Posting warning signals, flags, and/or barricades.
- Following Federal, State, Local, and Mountain Valley procedures and regulations for safe storage, handling, loading, firing, and disposal of explosive materials.
- Manning adjacent pipelines at valves for emergency response, as appropriate.
- Posting of portable signage, portable barricades, and visual survey of the blast area access ways to prevent unauthorized entrance into the blast zone by the public.
- Maintaining communications between all persons involved for security of the blast zone during any and all blasting/firing.
- In addition, excessive vibration will be controlled by limiting the size of charges and by using charge delays, which stagger each charge.

If blasting is conducted within 150 feet of an active water well, as necessary, Mountain Valley will conduct a pre-construction evaluation of the well. Upon request by a landowner who had a pre-construction test, a post-construction test will be performed. A Mountain Valley representative will contact landowners and a qualified independent contractor will conduct the testing.

All appropriate erosion and sediment control BMPs will also be installed at the blasting location, including but not limited to compost filter sock, silt fence, super-silt fence, belted silt fence, etc. Blasting will not occur within a flowing stream channel. All pipeline stream crossings will be conducted as an open-cut dry-ditch construction procedure. The dry-ditch methods include Flume Pipe Crossing (S&S – STD & SPEC: Plate 3.25-3), Cofferdam Crossing (S&S – STD & SPEC: Plate 3.25-4) and Dam and Pump (S&S – MVP-15). If test excavations are required to evaluate rock presence in the trench-line, this test will only

occur after the stream flow has been redirected and maintained via cofferdam, dam and pump or flume crossing.

DEQ Information Request No. 10: A Water Quality Monitoring Plan detailing measures to monitor potential impacts to water quality from upland ground-disturbing activities, including a discussion of:

A. criteria to identify select critical areas for monitoring with consideration of wild/stocked trout streams, endangered/threatened species waters, public water supplies, TMDL watersheds, Tier 3 streams, or areas near acidic soils;

B. a proposed monitoring schedule (e.g., before, during and after construction activity);

C. chemical monitoring parameters (e.g., temperature, dissolved oxygen, specific conductance, pH, and turbidity) and biological monitoring using DEQ approved methods; and

D. sample collection, handling and analytical QAQC procedures; and reporting procedures.

Mountain Valley Response No. 10: An Upland Construction Water Quality Monitoring Plan (UCWQMP) is included in Appendix 7. The UCWQMP has been prepared at the DEQ's request to monitor for potential water quality impacts from the Project's proposed upland ground-disturbing activities. This plan is intended to generate representative monitoring data that will provide assurance that the approved erosion and sediment controls and other similar water quality control measures are effective. This monitoring is in addition to any monitoring that may occur at stream and wetland crossings in accordance with any authorization issued by the U.S. Army Corps of Engineers. As requested, the plan considered monitoring of wild/stocked trout streams, endangered/threatened species waters, public water supplies, TMDL watersheds, Tier 3 streams, and areas near acidic soils.

There are no Tier 3 streams in proximity to the Project (*see* DEIS 4-90); thus, the final list of stream types considered are:

- Wild/stocked Trout Streams
- Endangered/threatened species waters (ETS)
- TMDL Watersheds
- Within 5 miles upstream of a Public Water Supply[8]
- Areas near acidic soils[9]

Potential Streams to be Monitored:

Utilizing the criteria above and cross-referencing with the National Hydrological Dataset, Preliminary Draft Joint Permit Application (JPA) dated May 16, 2017, the Virginia DEQ list of Draft and Final TMDL Implementation Plans[10], and the Acid Forming Materials Mitigation Plan (prepared by Draper Aden Associates, dated May 2017), Mountain Valley Pipeline (MVP) identified streams for potential monitoring.

---

[8] Available at: http://www.deq.virginia.gov/Programs/Water/WaterQualityInformationTMDLs/WaterQualityAssessments/2014305(b)303(d)IntegratedReport.aspx. Accessed January 2017

[9] Areas near acidic soils were defined as those where the drainage area of the pipeline right of way intersects acid forming soils and flows into a stream.

[10] Available at: http://www.deq.virginia.gov/Programs/Water/WaterQualityInformationTMDLs/TMDL/TMDLImplementation/TMDLImplementationPlans.aspx Accessed May 19, 2017.

To meet the DEQ criteria for this UCWQMP, the limits of upland ground-disturbing activities were then assessed to locate Project areas that are in the vicinity of and upgradient from streams that meet the criteria for this analysis. To isolate potential impacts from upland activities, this plan does not include sampling locations that are immediately downstream of Project stream crossings[11].

Recommended Monitoring Locations:

The following selection criteria was developed to determine the streams to be recommended for monitoring. The identified streams are listed in the Recommended Monitoring Table:

- Only perennial streams (based on the flow regime provided in the JPA or the National Hydrological Dataset) were considered to ensure that flow would be present to collect data for the necessary monitoring parameters
- A minimum of one stream for each type of criteria was selected;
- Streams that met more than one of the criteria (e.g., were both a Trout Stream and an ETS water) were preferred; and
- Streams which were listed only due to a TMDL for bacteria were not considered due to the lack of a relevant monitoring parameter (i.e., fecal coliform was not requested as a monitoring parameter).

Recommended Monitoring Locations (INFORMATION TO BE PROVIDED)				
Stream ID	**NHD Stream Name**	**County**	**Criteria Met**	**Project Activity**
1	Clendenin Creek	Giles	PWS Intake, Acid	Access Road
2	Sinking Creek	Giles	Trout	Access Road
3	Sinking Creek	Giles	Trout, ETS	Pipeline, Access Road, ATWS[12]
4	Sinking Creek	Giles	Trout, ETS	Pipeline, Access Road, ATWS
5	Craig Creek	Montgomery	ETS, TMDL (Sediment), Acid	Pipeline, Access Road, ATWS
6	North Fork Roanoke	Montgomery	ETS, PWS, TMDL (Bacteria)	Pipeline, Access Road
7	Mill Creek	Roanoke	Trout, TMDL (Bacteria and Sediment)	Pipeline, Access Road, ATWS
8	Little Creek	Franklin	ETS, TMDL (Bacteria)	Pipeline, Access Road, ATWS
9	Blackwater	Franklin	ETS, PWS, TMDL (Bacteria)	Pipeline, Access Road, ATWS

[11] Potential impacts associated with stream and wetland crossings are addressed separately in MVP's draft Joint Permit Application, which will serve as preconstruction notification for coverage under Nationwide Permit 12.
[12] Additional Temporary Workspace (ATWS)

Three sampling points are recommended for each sampling location for Chemical and Physical Parameters. One sample point will be upstream of the adjacent construction area, one sample point will be immediately adjacent to the construction area, and one sample point will be downstream of the adjacent construction area. Biological monitoring shall only be conducted upstream and downstream of the adjacent construction area. The purpose of the sampling is to determine if the adjacent upland land disturbing activities cause an impact to the nearby stream. The upstream sampling point shall help to determine a baseline condition for each particular monitoring event at each sampling location.[13]

A map depicting the recommended 10 stream monitoring locations is included in the UCWQMP (Appendix 7). Each map contains an inset photo that depicts the suggested sampling points. During the initial pre-construction monitoring, Mountain Valley shall select an exact point appropriate to existing field conditions and shall locate them with sub-meter GPS survey equipment for future monitoring events. If allowed by the landowner, a permanent survey marker shall also be installed.

Mountain Valley will make commercially reasonable attempts to obtain access for these monitoring locations. If access is limited (i.e., biological monitoring requires at least 300 feet for each sample reach, so some landowners may not concur with that element of the monitoring), or if access is denied, the monitoring program will be adjusted accordingly in consultation with DEQ.

Monitoring Parameters:

The following chemical parameters will be monitored:

- Temperature
- Dissolved Oxygen
- Specific conductance
- pH
- Turbidity

The following physical parameters will be monitored:

- Photo documentation
- General observations

The following biological parameters will be monitored:

- *Family-level macroinvertebrates*

Monitoring Frequency:

Mountain Valley will conduct monitoring of chemical and physical parameters prior to construction, during active construction, and after stabilization (i.e., seeding and mulching of the construction right-of-way). Biological parameters will be collected in accordance with DEQ requirements.

Monitoring Methodology:

Sampling of Chemical and Physical Parameters will be performed in-situ; collection of samples for laboratory analysis is not proposed because it is not practicable for these chemical parameters. Biological

[13] Although the upstream sampling point will provide evidence of baseline conditions, it may not necessarily be indicative of downstream baseline conditions in every case. Site conditions at the downstream sampling point may be influenced by other factors, such as contributions from tributaries and other potential sources of pollutants (e.g., runoff from roads).

sampling will be performed in the field with laboratory analysis of the collected specimens (i.e., sample sorting and identification). The sampling parameters will be recorded as follows:

Monitoring Methodology	
Chemical Parameters	Sampling Methodology
Temperature	*YSI 556 PRO PLUS Multi Probe System (MPS), or similar*
Dissolved Oxygen	*YSI 556 PRO PLUS Multi Probe System (MPS), or similar*
Specific conductance	*YSI 556 PRO PLUS Multi Probe System (MPS), or similar*
pH	*YSI 556 PRO PLUS Multi Probe System (MPS), or similar*
Turbidity (NTU's)	*LaMotte 2020we/wi Turbidimeter, or similar*
Physical Parameters	
Photo documentation, general observations	*GPS-enabled camera. Photos will have unique ID, date, and GPS coordinates. Photo stations will be staked in the field. General observations will also be recorded (i.e., weather, stream conditions)*
Biological Parameters	
Family-level macroinvertebrate monitoring	*EPA's Rapid Bioassessment Protocol*[14] *and A Stream Condition Index for Virginia Non-Coastal Streams*[15]

Handling and Analytical QA/QC Procedures:

Chemical/Physical Parameters:

All equipment will be calibrated prior to use in accordance with the manufacturer specifications, or according to the best professional judgment of the staff conducting the samples. A calibration log will be kept and made available upon request. Specific calibration protocols for the YSI 556 PRO PLUS Multi Probe System and the LaMotte 2020we/wi Turbidimeter are included in UCWQMP Appendix B. A daily equipment check prior to use will be performed to ensure good working order. "Emergency repair kits" for all equipment will be kept on-hand in the field during sampling events.

In order to facilitate robust QA/QC, all measurements will be taken via independent simultaneous sampling. Two staff members with identical equipment will perform the sampling simultaneously at each determined location to ensure that the results are accurate between calibrated equipment. This protocol will also guard against unexpected equipment failures.

Biological Parameters:

Biological sampling, sorting, identification and reporting will be conducted in accordance with the DEQ-approved Quality Assurance Project Plan (QAPP). A copy of the QAPP is included in

[14] Barbour, M.T., J. Gerritsen, and B.D. Snyder and J.B. Stribling. 1999. Rapid bioassessment protocols for use in streams and rivers; periphyton, benthic macroinvertebrates, and fish 2nd edition. U.S. Environmental Protection Agency, Office of Water, Washington, D.C. EPA841-b-99-002.
[15] Tetra Tech, Inc. 2003. A Stream Condition Index for Virginia Non-Coastal Streams. Tetra Tech, Inc. Owings Mills, Maryland. Prepared for Virginia Department of Environmental Quality, Richmond, Virginia.

UCWQMP (Appendix 7).

Reporting Procedures

Within 4 weeks of completing the sampling event the data (chemical results, bench sheets, metrics, and VSCI scores) will be provided by email to the address identified by DEQ. All data will be provided in PDF and Microsoft Excel file formats. Photographic information will be provided in a PDF and Microsoft Word file formats. Emails will be sent with a "read receipt" to confirm delivery.

If the monitoring during or following construction produces elevated or anomalous sample results that exceed the applicable water quality criteria, MVP will initiate consultation with DEQ within 5 business days of such sampling to determine an appropriate response.

Water Resource Identification and Testing Plan

In addition to the UCWQMP described above, Mountain Valley has also submitted to the FERC a Water Resource Identification and Testing Plan (WRITP). The WRITP is located in Appendix 8 and summarizes the Mountain Valley's protocols for identifying and assessing water resources near the Project. In summary, Mountain Valley is documenting locations and characteristics of private and public water supplies and offering to conduct pre-construction baseline testing. Mountain Valley will address private water supplies located within 150 feet, or 500 feet in karst terrain, of a Mountain Valley component. Mountain Valley will also address public water supplies that are located within three (3) miles downstream of the proposed alignment, or within a U.S. Geological Survey (USGS) Hydrologic Unit Code (HUC) HUC-10 watershed that also contains a Mountain Valley component.

Status of the WRITP: Mountain Valley has contacted all public water suppliers within a HUC-10 watershed (including surface water intakes located within three (3) miles upstream of Project stream crossing). Although there is no reasonable potential for adverse impacts to the identified public water supplies, MVP has worked with the operators address any concerns they may have. MVP has taken a number of actions as a result of these consultations, including making major alignment adjustments to accommodate public water suppliers' requests. Mountain Valley has also contacted and initiated pre-construction testing for all private water supplies within the first approximately 130 miles of the Project, and the southern-most approximately 40 miles of the Project. For the remaining mid-section of construction (i.e., between approximately mile post 130 and mile post 260), Mountain Valley has initiated contact with private water supply owners in May 2017 and sampling is currently underway for this section. As noted in the WRITP, the pre-construction monitoring results will be provided directly to the water supply owners. Mountain Valley has documented its commitment to protecting all water supplies (public and private) during Project construction and reclamation, avoiding any disruptions in water service through contingency planning, and establishing a complaint resolution process in the event an owner considers the Project to have impacted water supply quality or quantity.

The Water Resource Identification and Testing Plan includes the following topics:

Identifying Water Resources: This section of the WRITP summarizes Mountain Valley's approach to identifying private wells/springs and public water supplies, which includes desktop information, field investigations, and outreach to affected landowners and public water suppliers.

Pre-Construction Baseline Water Resource Testing: This section of the WRITP identifies that Mountain Valley will conduct two baseline pre-construction water resource testing events at each identified private and public water resource. The section also describes how the owners will be contacted; property will be

accessed; sample locations identified, and sample collection protocols.

Complaint Resolution Process: Although Mountain Valley believes that there is no reasonable potential for adverse impacts to private water supplies and springs. This section describes the procedures to be followed if a complaint is made by a water supply owner, details the hydrologic investigative processes, and discuss potential restoration activities (such as temporary water supplies, connection to secondary on-site sources, and/or temporary treatment to establish baseline quality, permanent treatment systems, and/or new on-site sources).

DEQ Information Request No. 11: A Karst Mitigation Plan including discussion of measures to:

A. identify known karst features within areas of land disturbance activities for construction of a pipeline and related access roads and appurtenances;

B. minimize the potential for any impacts to surface waters including water supply sources;

C. evaluate subsurface flow paths;

D. propose monitoring activities during the period of construction; and

E. mitigation measures applicable in the event of any impacts.

Mountain Valley Response No. 11: Draper Aden Associates completed a detailed assessment of karst features in the vicinity of the proposed Mountain Valley Pipeline alignment and related Project components using desktop analysis and field verification (where property owners granted access by the owner to Mountain Valley). The results of the assessment were documented in the Karst Hazards Assessment (KHA) (submitted to the FERC in Resource Report #6) with the most recent updates submitted to the FERC in February 2017 (see Attachment 11-1, Appendix 9). Mountain Valley also prepared a Karst Mitigation Plan (KMP), with the most recent updates submitted to the FERC in February 2017 (see Attachment 11-2, Appendix 9). The following discussion identifies how the information requested by DEQ in items (a) through (e) listed above by the DEQ has been developed and submitted to the FERC record, and where DEQ can obtain and review these data and information sources in existing Plans. The Karst Mitigation Plan and information discussed below is in Appendix 9.

DEQ Information Request No. 11A: Identify known karst features within areas of land disturbance activities for construction of a pipeline and related access roads and appurtenances**;**

Mountain Valley Response No. 11A: The Karst Hazards Assessment (KHA) identified karst features through desktop analysis of public and proprietary data, and field reconnaissance (where the owner granted property access by the owner to Mountain Valley) within a 0.25-mile of the proposed alignment and related Project components. The extent of karst evaluation was expanded beyond 0.25-mile where the likelihood of karst feature occurrence was deemed to be high. See Section 2.1 of the KHA report. Note that this process for desktop analysis and field verification of karst features (where property access was granted by the owner to Mountain Valley) was conducted for each variation of the proposed alignment, including alternatives. The information was used by Mountain Valley to evaluate the relative merits of the various proposed alignments and associated alternatives. The information was also used in the process of establishing hundreds of major and minor alignment adjustments to protect karst features and related water resources.

The KHA was completed by the Mountain Valley Karst Specialist Team, which consists of scientists that have extensive experience in assessing karst hydrology in southern West Virginia and southwestern

Virginia. The KHA was completed under the direction of the Project Karst Specialist, who holds qualifications of a professional geologist having direct work experience with karst hydrology and geomorphic processes.

Desktop analysis included review of publicly available data sources, and data provided by the Virginia Speleological Survey and West Virginia Speleological Survey. Location information for many karst features was based on information collected by volunteer amateur cavers, continuously compiled since the early 1940s. Many of these historically documented karst features, originally mapped on 15-minute USGS topographic quadrangle maps, were transcribed onto more modern 7.5-minute topographic maps and location coordinates were estimated. Field verification was conducted (where property owner permission was granted) to verify a mapped karst feature as well as to identify previously undocumented karst features. See Section 2.1 of the KHA.

The KHA greatly expanded the knowledge base regarding local karst features, identifying numerous caves and spring insurgences that were previously undocumented. Locations of previously identified features were also confirmed and updated by this effort. Equally important to identifying karst features, is documenting a lack of karst features in areas that previously had little to no historic karst review. Direct interaction with property owners, commenters, and state agencies during preparation of the KHA facilitated karst feature identification and this additional knowledge will serve as an asset to future karst research efforts. In response to these efforts, Mountain Valley adjusted the proposed alignment in numerous locations to avoid associated potential hazards using the information gathered through the current and previous KHA efforts.

The KHA also benefited from recent additional karst feature and hydrogeology information collected by Mountain Valley in the Mount Tabor area (Montgomery County, Virginia) which included field mapping and an electrical resistivity study, and additional field mapping information gathered in the Canoe Cave area (Giles County, Virginia). The electrical resistivity study was submitted to the FERC by Mountain Valley under separate cover under Docket No. CP16-10-000, Attachment DR4 Geology 10, March 2017.

DEQ Information Request No. 11B: Minimize the potential for any impacts to surface waters including water supply sources;

Mountain Valley Response No. 11B: Mountain Valley will follow the site-specific procedures approved by DEQ in its ESC Plans) that will include enhanced Best Management Practices (BMPs) for karst terrain. The ESC plan will be developed based upon the information in the S&S (which is currently under review at the DEQ), KHA, KMP, and SPCC plan. Elements of each of these documents are designed to prevent uncontrolled release of storm water, sediment and construction-related fluids from the limit of disturbance, and thus to protect surface water and groundwater. Mountain Valley will adhere to state regulations and local ordinances for controlling construction-related discharges.

In regards to karst features and related karst aquifers, the Karst Mitigation Plan (KMP), Sections 1.5, 1.8 and 1.9, focuses on karst feature stabilization, management of newly identified features, and measures to avoid impacts to karst features and related groundwater aquifers. Karst feature stabilization, if required will be completed in conjunction with recommendations from the Virginia Department of Conservation and Recreation, Karst Protection.

Section 1.7 details procedures (Level 2 Inspection) to be followed by the Karst Specialist Team in the event a previously unidentified karst feature is encountered, or forms, within the LOD. Importantly, the Karst Specialist Team will examine the suspected karst feature to identify potential connectivity to the subterranean environment and the potential risk to impact groundwater quality. The choice of characterization methods will be proposed to Mountain Valley by the Karst Specialist Team, and will

include any combination of (but not be limited to): visual assessment and physical inspection; geophysical survey; track drill probes; infiltration or dye trace testing; or other techniques utilized to facilitate subsurface characterization of karst features.

If the karst feature does not appear to have connectivity to the subterranean environment and the risk to impact groundwater quality, the Karst Specialist Team will provide Mountain Valley Construction with a recommendation on stabilization measures for the feature (see Section 1.9 of the KMP).

If it is determined that the feature has connectivity to the subterranean environment and potential to impact groundwater, the Karst Specialist Team will consult with Mountain Valley Construction regarding appropriate mitigation. Mitigation activities would be conducted in conjunction with recommendations from the Virginia Department of Conservation and Recreation, Karst Protection.

DEQ Information Request No. 11C: Evaluate subsurface flow paths;

Mountain Valley Response No. 11C: In March 2017, Mountain Valley submitted information to the FERC under Docket No. CP16-10-000, Attachment DR5 Geology 1a/1b (also provided herein as Attachment 11-3, Appendix 9) that addressed comments presented by the Virginia Cave Board (VCB) in December 2016 under Accession number 20161222-5394 (Commonwealth of Virginia). In response to the VCB's December 2016 comments, Mountain Valley's Karst Specialist Team prepared the March 2017 response that is included in Appendix 9, Attachment 11-3 of this document.

In the March 2017 document (see Attachment 11-3, Appendix 9), the Mountain Valley Karst Specialist Team presented detailed discussion and mapping on karst hydrogeology and subsurface flow paths in specified critical karst areas identified by the VCB. Karst Specialist Team completed analysis and recommendations regarding surface hydrology, karst terrain and specific features, and groundwater flow paths. Detailed dye tracing and other studies were determined to be unnecessary. The flow patterns can be extrapolated from existing knowledge of the areas, including previous dye trace studies. For example, the Mount Tabor sinkhole plain drains to Mill Creek Spring (confirmed from previous dye trace studies); there is no need to trace every sinkhole or sink point within the sinkhole plain. For other areas identified by the VCB, there is sufficient existing information to extrapolate subsurface flow patterns and/or the identified features have little catchments other than the sinks themselves. The following summarizes the Karst Specialist Team's understanding of karst hydrogeology in the critical areas identified by the VCB (see Attachment 11-3, Appendix 9).

The December 2016 Accession number 20161222-5394 submittal (referenced above) recommended detailed hydrogeologic studies be conducted at several specific areas of karst terrain, listed below by milepost: 201.66, 205.02, 205.20, 209.10, 209.75, 215.24, 216.22, 216.52, 217.13, 218.15, 223.33, 223.34, 223.46, 224.00, 226.20, 226.89, 227.57, 234.43, 234.73, 235.13. Mountain Valley's Karst Specialist Team reviewed each of these areas, and provided specific observations in the March 2017 Attachment DR5 Geology 1a / 1b submittal to the FERC (Attachment 11-3, Appendix 9). Note that due to the mutual proximity of several features identified by the VCB, it was more logical to assess several milepost locations as follows:

Milepost 201.66 (See Figure 1 of 7 in Attachment 11-3, Appendix 9)

The VCB references a group of sinkholes straddling and adjacent to Big Stoney Creek Road near MP 201.66, bisected by Big Stoney Creek Road (State Route 635). This road is used extensively by trucks associated with the active mining operations for the Lhoist Chemical lime plant in Kimballton, Virginia. The subsurface flow direction from the vicinity of these sinkholes is most likely along strike to the southwest toward the New River (regional groundwater divide), and likely intersects the Dry Branch

subterranean flow. Dry Branch sinks in its bed just over a mile south-southeast and resurges at a spring on the New River. This was dye traced and confirmed by the Virginia DCR in 2002 (personal communication; Wil Orndorff, Va. DCR Karst Protection Coordinator).

Milepost 205.02 (Eight Point Cave) and 205.20 (High Voltage Cave) (see Figure 2 of 7 in Attachment 11-3, Appendix 9):

The VCB references the locations where the proposed alignment crosses the southwest ridge of Doe Mountain and where it overlies limestone that outcrops near the top of the ridge. Groundwater flow in this area is most likely to the southwest along bedrock strike toward Little Stoney Creek (local groundwater divide), with subterranean flow discharging into the alluvial deposits and on to nearby New River (regional groundwater divide). Additionally a dye trace study conducted by the Virginia DCR in 2002 indicated westerly flow from a swallet on Little Stony Creek, along a line of sinkholes that lie along the contact of the limestone and the overlying Eggleston Formation, to Klotz Spring (personal communication; Wil Orndorff, Va. DCR Karst Protection Coordinator). While evaluating these mileposts for the KHA (Attachment 11-1, Appendix 9), the Karst Specialist Team identified a water supply spring near Kow Camp Road, approximately 1,900 feet south of and 100 feet topographically below the proposed alignment stream crossing at MP 205.3. Mountain Valley will be contacting the property owner in mid-2017 to request permission to conduct pre-construction testing of the spring as part of the Water Supply Identification and Testing Plan (Resource Report #2, most recently updated in February 2017).

Milepost 209.10 and Milepost 209.75 (see Figure 3 of 7 in Attachment 11-3, Appendix 9):

The VCB references two sinkholes south of Cave Hill Road, a large, dry, forest-floored and unaltered sinkhole near MP 209.10 and a collection of sinks near MP 209.75, some of which have been partially filled with field rock over the decades as a result of traditional pasture clearing. These locations are just south of the well-known Pighole Cave (Mountain Valley completed a major realignment of the proposed route to avoid Pighole Cave, and is now 1,600 feet south and downgradient of the cave). The lowest point of Pighole Cave is at an elevation of approximately 1,865 feet above mean sea level (AMSL) where a small stream disappears, confirming that local groundwater base level is at least lower than 1,865 feet AMSL with downward flow well below the sinkholes identified by the VCB. The regional subterranean flow pattern is to the west-southwest along strike towards the New River (regional groundwater divide). In 1981 Saunders et al, conducted a dye trace study at a sinking stream in the vicinity of this area referenced by the VCB.[16] The Karst Specialist Team notes that the Saunders et al (1981) dye trace passed several hundred feet below the MVP alignment, en route to known resurgence. A dye trace study at milepost 209.10 milepost 209.75 is not needed to confirm what is already concluded about subterranean groundwater flow paths shown by previous dye studies. The proposed alignment entails excavating an approximate 10-foot ditch that would be 200 or more feet above the flow path identified in the Saunders et al (1981) trace. Practically speaking, little information would be gained by tracing these sinkholes relative to pipeline construction, and more effective dye studies would likely be focused two miles to the west of the MVP route, which is well beyond the area of concern for the VCB or DEQ.

Mileposts 215.24, 216.22, 216.52, 217.13, and 218.15 – Canoe Cave and local catchment (see Figure 4 of 7 in Attachment 11-3, Appendix 9):

In the vicinity of these mileposts referenced by the VCB, The proposed alignment follows the northwest

[16] Reference: Saunders, J.W.; Ortiz, R.K.; and Koerschner III, W.F., 1981, Major groundwater flow directions in the Sinking Creek and Meadow Creek drainage basins of Giles and Craig Counties, Virginia, USA., in Beck, B.F. (editor), Proceedings of the Eighth International Congress of Speleology, Bowling Green, Kentucky, July 18-24, 1981.

flank of Sinking Creek Mountain, in the lowland valley underlain by carbonate bedrock, generally 100 to 200 feet in elevation above Sinking Creek (local groundwater discharge zone) (see Sheet 23 of 37 of the KHA, Appendix 9). The exception to this relative positioning of the proposed alignment is the major alignment adjustment that avoids the Canoe Cave and associated spring near MP 214.9. There is effectively no risk for disturbing the physical portions of Canoe Cave since the construction right of way (ROW) is approximately 800 feet from the mapped extent of the cave (see Figure 4 of 7 in Attachment 11-3, Appendix 9). The extent of Canoe Cave was confirmed as recently as 2016 by field mapping conducted by the Virginia Department of Conservation and Recreation (personal communication; Wil Orndorff, Va. DCR Karst Protection Coordinator). A large buffer of undisturbed land (approximately 800 feet) will be maintained between the edge of the construction right-of-way and the Canoe Cave. Furthermore, the proposed alignment in the vicinity of Canoe Cave is situated on previously cleared farmland such that additional tree clearing will not be necessary near the cave and spring and this greatly (in conjunction with BMPs discussed above) reduces the potential for impact to the local hydrology.

Canoe Cave encounters subsurface water at the approximate elevation of Canoe Cave Spring (see Figure 4 of 7 in Attachment 11-3, Appendix 9), and the pools appear to represent the local water table likely connected to the subterranean karst flow regime of the localized catchment for Canoe Cave. The air-filled section of Canoe Cave (i.e., between the entrance and the above-referenced water pools) does not host perennial flowing water. The proposed route is topographically lower than the spring associated with Canoe Cave and crosses the spring outflow approximately 370 feet downstream of Canoe Cave Spring itself (see Figure 4 of 7 in Attachment 11-3, Appendix 9). Allogenic recharge to the karst system(s) in the vicinity of Canoe Cave is typically found topographically higher on Sinking Creek Mountain, at the upper limestone contact (see Figure 4 of 7 in Attachment 11-3, Appendix 9). The proposed alignment construction entails a 7- to 10-foot deep, narrow excavation that is downslope and downgradient hydrologically from Canoe Cave and Spring and as such does not have reasonable potential to affect the Cave or Spring. Please refer to the additional detailed discussion presented on Pages 5 through 7 Attachment 11-3, in Appendix 9, for an assessment of the larger karst catchment and potential allogenic recharge to Canoe Cave and the associated Spring.

In summary, the proposed alignment poses negligible risk for impacts to Canoe Cave and spring, and other related karst features and resources in the vicinity due to the location of the proposed alignment being both topographically and hydrologically below (at lower elevations) than these karst features.

Mileposts 223.33, 223.34, and 223.46 – Mount Tabor Area (see sheet Figure 5 of 7 in Attachment 11-3, Appendix 9):

The VCB references sinkholes just south of Mount Tabor Road. In late 2016, the Virginia DCR conducted a dye trace from a sinkhole in this vicinity but just north of the road. The trace flowed southwest paralleling a sinkhole lineament to Slussers Chapel Cave and related hydrologic complex thus extending the proven subsurface catchment to this saddle between Mill Creek and Dry Run surface watersheds (personal communication; Wil Orndorff, Va. DCR Karst Protection Coordinator). The sinkholes referenced by the VCB are near the DCR dye trace study, which confirms the likely subsurface flow pattern. The elevation change from the DCR dye input to the spring is approximately 400 feet, though it passes through Slussers Chapel Cave achieving a depth range of about 315 feet at that location. Based on the Karst Specialist Team's knowledge of karst development demonstrated by the caves of the area, it is reasonably concluded that water infiltrating the bedrock in the vicinity of the sinkholes referenced by the VCB will also drop rapidly downward toward base groundwater level. Based on this evidence, which expands and confirms the understanding of subterranean flow in the Mount Tabor area by the KST, additional dye trace studies are unnecessary and redundant, especially immediately adjacent to a recent study.

Milepost 224.00 – Mount Tabor Area (see sheet Figure 5 of 7 in Attachment 11-3, Appendix 9):

Small sinkholes with little or no catchment area are located near the top of the hills and ridges near MP 224 identified by the VCB. These small sinkholes likely represent more of a coarse bedrock surface than a well-developed karst process. This location is just beyond the DCR Slussers Chapel Conservation Site and also the site of recent logging operations spanning the Conservation Site boundary. Precipitation that does not flow on the surface to lower elevations will enter the ground in a diffuse manner. The alignment carefully avoids the sinkhole(s) in this area and Mountain Valley anticipates no impact to the karst environment as a result of crossing the ridge at this location. Practically speaking, little information would be gained by conducting a dye trace study in this area. Subterranean groundwater flow is largely understood by the Karst Specialist Team in the Mount Tabor area, and previous dye trace studies referenced above general confirm the overall flow direction in this area.

Milepost 226.20 – Mount Tabor Catawba Road Areas (see sheet Figure 6 of 7 in Attachment 11-3, Appendix 9):

The VCB references a large sinkhole located east of the alignment near MP 226.20. The proposed alignment traverses the edge of the catchment for this sinkhole (see Figure 6 of 7 in Attachment 11-3, Appendix 9). The sinkhole is approximately 500 feet in elevation above groundwater base flow identified by DCR dye trace studies. The Karst Specialist Team concludes that precipitation received by the sinkhole and general karst infiltration in this area will infiltrate and join the flow pathway identified by DCR dye tracing referenced above. Groundwater discharge is to Old Mill Cave Spring, Dam Spring, and Hancock Spring[17] (see Figure 6 of 7 in Attachment 11-3, Appendix 9). This is the most reasonable interpretation of subterranean flow based upon previous studies, and the Karst Specialist Team's decades of experience studying this area, and would make dye tracing at this location of limited value.

Milepost 226.89 – Mount Tabor Catawba Road Areas (see sheet Figure 6 of 7 in Attachment 11-3, Appendix 9):

The VCB referenced a linear sinkhole features that trends toward a small spring and noted concern with the close proximity of the previous FERC 4.0.0 proposed alignment. The current proposed alignment is approximately 2,000 feet northeast of the spring though still crosses the aligned set of sinkholes (see Figure 6 of 7 in Attachment 11-3, Appendix 9). These sinkholes are formed along bedrock strike adjacent to a narrow and unmapped shale stratum. This shale layer likely acts as an impervious barrier that guides subsurface flow along the carbonate-shale contact to the southwest to discharge at the small spring. Construction activities in this area is not likely to impact the spring given the buffer distance. The Karst Specialist Team concludes that groundwater flows along the carbonate-shale contact toward the spring with base level discharge likely at Hancock Spring, based on decades of study and our overall understanding of subsurface flow in this area. Dye tracing this sinkhole alignment to the spring would provide little relevant or additional information in the context of pipeline construction.

Milepost 227.57 – Mount Tabor – Catawba Road Areas (see sheet Figure 6 of 7 in Attachment 11-3, Appendix 9):

In the vicinity of milepost 227.57, the VCB referenced its concern regarding a sinking stream east of the proposed alignment. On the southeast side of the North Fork of the Roanoke River is the final karst-forming carbonate outcrop in the Mount Tabor area where a small surface stream sinks at the contact between the Edinburg Limestone and the non-carbonate Bays Formation. Subterranean water likely flows southwest,

[17] Fagan, J. and Orndorff, W; "Karst Hydrology Investigations in the Cambrian Elbrook and Conococheague Formations of Pulaski and Montgomery Counties, Virginia". Proceedings of the Second Appalachian Karst Symposium May 7-10, 2008, East Tennessee State University, Johnson City, Tennessee

generally in alignment with three sinkholes and through Johnsons Cave, to discharge at Johnsons Cave Spring on the North Fork of the Roanoke River. The proposed alignment crosses this small stream in non-karst terrain approximately 930 feet uphill from the swallet. Similarly, another potential swallet was observed by the Karst Specialist Team just west of MP 227.55. On the October 21, 2015 field visit by the KST to conduct the KHA (see Attachment 11-1, Appendix 9), the stream near MP 227.55 was dry while the 227.57 stream was flowing. During wet periods both streams overflow their sink points and continue to the North Fork of the Roanoke River by overland flow, evidenced by observing the stream beds. The sink point locations on both streams are below the contact between the Edinburg limestone and the non-carbonate Bays Formation. For both sink points the Karst Specialist Team has concluded, through its decades of study in this area, that subterranean water flows to the west along the bedrock strike and coincident with the aligned sinkholes (see Sheet 6 of 7, Attachment 11-3, Appendix 9), through Johnsons Cave, and out at Johnsons Cave Spring. The KST concludes that the surface and subsurface flow patterns described above are the most reasonable interpretation of local conditions. Dye tracing the swallets described above would provide little relevant information or new information in the context of pipeline construction, and would only confirm what is a relatively simple karst setting.

Milepost 234.43, 234.73, 235.13 (see sheet Figure 7 of 7 in Attachment 11-3, Appendix 9):

The VCB references a small stream swallet and sinkholes in the Elbrook Limestone in the vicinity of mileposts 234.43, 234.73 and 235.13. These features were observed by the Karst Specialist Team during July 15, 2016 field reconnaissance for the KHA. The swallet is approximately 140 feet southeast of the proposed alignment within a topographic drainage alongside Cannery Road. In wet weather, this drainage joins a small intermittent stream approximately 600 feet further to the southeast, which includes drainage from storm water culverts under and alongside Interstate-81. The sinkholes referenced by VCB are on the scale of three to six feet in diameter and approximately one foot deep, located on the top of a small ridge with very limited catchment beyond their topographic edges. Precipitation infiltration therefore is predominantly diffuse from the surface to the local water table. At present, no springs are known to exist along the base of the ridge. The KST concludes, based on sound principles of groundwater flow, that the most reasonable flow path is from the top of the ridge to the flood plain along the river at the base of the ridge, and that dye trace studies would simply confirm this, and would provide little or no new or useful information in the context of pipeline construction.

In summary, these assessments of karst hydrogeology and subsurface flow direction completed by the Karst Specialist Team are based on existing knowledge gained from decades of experience studying karst hydrogeology in this area, as well as previous dye tracing in certain areas, and sound fundamentals of hydrogeology. In the critical areas identified by the VCB where previous dye trace studies have not been completed, the Karst Specialist Team recommends that such studies are not necessary to confirm what is the most reasonable assessment of subterranean karst groundwater flow.

DEQ Information Request No. 11D: <u>Propose monitoring activities during the period of construction;</u>

Mountain Valley Response No. 11D: Section 1.4 of the Karst Mitigation Plan (KMP) (Attachment 11-2, Appendix 9) specifies that Mountain Valley will deploy the Karst Specialist Team on-site during all phases of construction activities (e.g., clearing and grubbing, trenching, blasting if required, boring or drilling if required, reclamation) in karst terrain to confirm the location and status of previously identified karst features, identify any previously unidentified karst feature (i.e., on properties where Mountain Valley was not granted access during the KHA process), conduct detailed inspections of any newly encountered karst features (refer to Section 1.6 and 1.7 of the KMP, Appendix 9).

The Karst Specialist Team will collaborate with Mountain Valley Construction for avoidance and mitigation measures as necessary, and to ensure that Best Management Practices (i.e., Erosion and Sediment Control Plan, SPCC Plan, KMP, etc.,) are implemented to project karst features and the subsurface groundwater resources. Refer to Sections 1.5, 1.8 and 1.9 of the KMP (Attachment 11-2, Appendix 9) for descriptions of karst feature stabilization, management and avoidance.

The Karst Specialist Team will notify the Virginia Department of Conservation and Recreation, Karst Protection Coordinator, in the event any new karst features are encountered or form during construction and require stabilization. Note that the inspection, avoidance, stabilization and mitigation actions are applicable to all areas of land disturbance associated with pipeline construction and other Project components (e.g., access roads, laydown yards, etc.).

DEQ Information Request No. 11E: Mitigation measures applicable in the event of any impacts.

Mountain Valley Response No. 11E: As documented in the KHA (see Table 2 of KHA, Appendix 9), Mountain Valley has completed alignment adjustments to avoid all major karst features. What remains within the proposed LOD for the Project are minor sinkholes. Mountain Valley also prepared a Karst Mitigation Plan, with the most recent updates submitted to the FERC in February 2017. If a sinkhole is located within the proposed LOD and cannot be reasonably avoided, the sinkhole will be stabilized prior to construction in accordance with recommendations provided by the Karst Specialist Team, and generally consistent with recommendations from the Virginia Department of Conservation and Recreation, Karst Protection (refer to Section 1.5 of the KMP, Appendix 9). A weekly Level 1 Inspection (Section 1.6 of the KMP, Appendix 9) of the stabilized feature will be completed and documented by the Karst Specialist Team while construction activities are in the vicinity of the stabilized feature. Mitigation activities will be documented upon completion in a report prepared by the Karst Specialist Team for Mountain Valley.

The Karst Specialist Team will contact the Virginia Department of Conservation and Recreation, Karst Protection Coordinator regarding proposed mitigation activities. DCR may request to review the feature prior to further disturbance. As discussed earlier in this response, Section 1.7 of the KMP (Attachment 11-2, Appendix 9) details procedures to be followed by the Karst Specialist Team in the event a previously unidentified karst feature is encountered, or forms during construction, within the LOD. The choice of characterization, avoidance or mitigation methods will be conducted as discussed in Section 1.7 of the KMP (Attachment 11-2, Appendix 9), and coordinated between the Karst Specialist Team and Mountain Valley Construction.

DEQ Information Request No. 12: Description of onsite environmental monitoring and inspection measures to be implemented during construction.

Mountain Valley Response No. 12: Mountain Valley has submitted the S&S to the DEQ for approval. Section 2.0 of the S&S describes the plan development, review, submittal, inspection, implementation, and reporting requirements of the Project. In regards to inspection requirements, the Project will include one Lead Environmental Inspector (LEI) and at least one Environmental Inspector (EI) per construction spread. Inspection staff requirements will be determined by Mountain Valley based on the construction activities being undertaken and accessibility to the active areas while providing appropriate coverage to maintain environmental compliance. The LEI and EI will be required to be knowledgeable of environmental permit compliance requirements, be experienced in ESC and SWM BMP installation, operation and maintenance requirements, Project permit conditions and experienced with the FERC's Plan and Procedures. The LEI/EI will review the implementation of these Standards and Specifications and any applicable environmental permits, resolve apparent conflicts between permits and these Standards and Specifications, and coordinate with the Construction Supervisor about additional measures which may be needed to address erosion and sedimentation. The LEI will also keep a daily log of activity documenting Project activities related to

environmental permit compliance and corrective measures implemented, site visitors (i.e. non-project staff), waterbody and wetland crossing log and ESC installation and maintenance activities. Please note that more specific inspector functions are listed in Section 2.0 of the S&S.

The Project will have at least one DEQ-Certified ESC and SWM Inspector per construction spread. These inspectors may be the same LEI and EI described above or a DEQ-Certified ESC and SWM Inspector from a third party contractor. Mountain Valley may enter into agreements or contracts with soil and water conservation districts, adjacent localities, or other public or private entities to carry out or assist with these responsibilities.

The Project will also have a FERC third party inspector as required. This inspector will have peer status with all other activity inspectors and shall have the authority to stop activities that are inconsistent with the environmental conditions of the FERC certificate or other authorizations and order corrective action once approval has been granted by the Mountain Valley Project Manager.

Lastly, the Project will be regularly inspected by DEQ staff. MVP understands that DEQ intends to allow representatives from affected localities to accompany DEQ staff on these inspections as well.

The inspection frequencies are as follows:

ESC Inspection Requirements (9VAC25-840-60, § 62.1-44.15:58)
- Immediately following initial installation of ESCs;
- At least once in every two-week period;
- Within 48 hours following any runoff producing storm event;
- At the completion of the project prior to the release of any performance bonds; or
- More frequently if required by the SWPPP.

SWM Inspection Requirements (9VAC25-870-114, § 62.1-44.15:37)
- Periodically inspect the installation of stormwater management measures;
- Maintain inspection reports (including any monitoring data, if conducted); and
- Conduct such investigations and perform such other actions as are necessary to carry out the provisions of this article.

Mountain Valley will provide weekly e-reporting, via email to the DEQ linear projects inbox address (LinearProjects@deq.gov). This e-reporting will be directed to the appropriate DEQ representatives and/or applicable regional office. Inspection reports will be submitted based on Mountain Valley's construction spread break basis and identified as such. Mountain Valley intends to utilize four construction spreads for Project construction activities in the Commonwealth. Weekly reports will be submitted the week following the inspections and will include the weekly inspection report per spread as well as the post-rainfall event inspections that occur during the reporting week. The reports shall include the following: Inspection Reports; Inspection Photos; Complaint Logs; Complaint Responses; and other compliance documents.

The operator shall make all site documents, including all amendments, modifications, updates, and the Stormwater Pollution Prevention Plan (SWPPP) available upon request by the DEQ. Although MVP does not anticipate discharging to any municipal separate storm sewer systems (MS4), the SWPPP will be made available to local MS4 operators upon request as well. This information will be posted electronically for public review.

* * *

Mountain Valley looks forward to continuing to work with DEQ moving forward. Please feel free to contact me if you have questions or need any additional information. Thank you for your time and consideration.

Sincerely,

John Centofanti
Corporate Director Environmental Affairs
(412) 395-3305
JCentofanti@eqt.com

Appendix List

Appendix 1:
Table 1: Perennial Streams with Designation

Table 1. Perennial Streams with Designations

Stream ID	NHD Stream Name[1]	County	Latitude[2]	Longitude[2]	Flow Regime	Water Type[3]	Cowardin[4]	Top of Bank Width (ft)	Project Activity	Temporary Impact (linear ft)	Permanent Impact (linear ft)	Notes	Stream Designation[5]	T&E Species[6]	TMDL Watersheds with Established TMDL's[7]	Public Water Supply[8]
S-Z13	Little Stony Creek	Giles	37.341121	-80.621071	Perennial	RPW	R2RB2	25	Outside of Temporary Access Road LOD; within 50ft	0	0	E&S BMP protection; no impact	Wild Trout - Brook, Rainbow	-	-	-
S-RR13	Craig Creek	Montgomery	37.314662	-80.402385	Perennial	RPW	R2UB1	35	Outside of Temporary Access Road LOD; within 50ft	0	0	E&S BMP protection. No impact.	-	Upstream of known James spinymussel populations	James River, Upper Upper - Total Phosphorus, Total Suspended Solids, Total Nitrogen	-
S-RR13	Craig Creek	Montgomery	37.314330	-80.403364	Perennial	RPW	R2UB1	35	Outside of Temporary Access Road LOD; within 50ft	0	0	E&S BMP protection. No impact.	-	Upstream of known James spinymussel populations	James River, Upper Upper - Total Phosphorus, Total Suspended Solids, Total Nitrogen	-
S-NN17	Sinking Creek	Giles	37.311151	-80.516754	Perennial	RPW	R2UB1	55	Outside of Temporary Access Road LOD; within 50ft	0	0	E&S BMP protection. No impact.	Stockable Trout	Candy darter, green floater	-	-
S-KL9	Sinking Creek	Giles	37.304482	-80.535348	Perennial	RPW	R2UB1	50	Outside of Temporoary Access Road LOD; within 50ft	0	0	E&S BMP protection. No impact.	Stockable Trout	-	-	-
S-G36	North Fork Roanoke River	Montgomery	37.268535	-80.314897	Perennial	RPW	R2UB1	20	Outside of Pipeline LOD; within 50ft	0	0	E&S BMP protection. No impact.	-	Roanoke logperch, orangefin madtom	North Fork Roanoke River - PCB Roanoke River - PCB, Sediment, E. Coli	-
S-KL7	UNT to Flatwoods Branch	Montgomery	37.251391	-80.289103	Perennial	RPW	R3UB3	6	Outside of Temporoary Access Road LOD; within 50ft	0	0	E&S BMP protection. No impact.	-	-	North Fork Roanoke River - PCB Roanoke River - PCB, Sediment, E. Coli	-
TTVA-S-208	UNT to Roanoke River	Roanoke	37.250069	-80.205330	Perennial	RPW	R2	12	Outside of Permanent Access Road LOD; within 50ft	0	0	E&S BMP protection. No impact.	-	-	Roanoke River - PCB, Sediment, E. Coli	-
S-EF20d	UNT to Roanoke River	Roanoke	37.215556	-80.188980	Perennial	RPW	R3UB3	10	Outside of Temporary Access Road LOD; within 50ft	0	0	E&S BMP protection. No impact.	-	-	Roanoke River - PCB, Sediment, E. Coli	-
S-EF20d	UNT to Roanoke River	Roanoke	37.215556	-80.188980	Perennial	RPW	R3UB3	10	Outside of Temporary Access Road LOD; within 50ft	0	0	E&S BMP protection. No impact.	-	-	Roanoke River - PCB, Sediment, E. Coli	-
S-EF20d	UNT to Roanoke River	Roanoke	37.215556	-80.188980	Perennial	RPW	R3UB3	10	Outside of Temporary Access Road LOD; within 50ft	0	0	E&S BMP protection. No impact.	-	-	Roanoke River - PCB, Sediment, E. Coli	-
S-EF20d	UNT to Roanoke River	Roanoke	37.215556	-80.188980	Perennial	RPW	R3UB3	10	Outside of Temporary Access Road LOD; within 50ft	0	0	E&S BMP protection. No impact.	-	-	Roanoke River - PCB, Sediment, E. Coli	-
S-EF20b	UNT to Roanoke River	Montgomery	37.212876	-80.191564	Perennial	RPW	R3UB3	4	Outside of Temporoary Access Road LOD; within 50ft	0	0	E&S BMP protection. No impact.	-	-	Roanoke River - PCB, Sediment, E. Coli	-
S-ST9	UNT to Mill Creek	Roanoke	37.154424	-80.129179	Perennial	RPW	R3UB2	15	Outside of Pipeline LOD; within 50ft	0	0	E&S BMP protection. No impact.	-	-	South Fork Roanoke River - PCB Roanoke River - PCB, Sediment, E. Coli	-
TTVA-S-301	Mill Creek	Roanoke	37.145683	-80.130989	Perennial	RPW	R2	22	Outside of Temporoary Access Road LOD; within 50ft	0	0	E&S BMP protection. No impact.	Stockable Trout	-	South Fork Roanoke River - PCB Roanoke River - PCB, Sediment, E. Coli	-
S-Z18	UNT to Mill Creek	Roanoke	37.135252	-80.134134	Perennial	RPW	R3UB2	4	Outside of Temporoary Access Road LOD; within 50ft	0	0	E&S BMP protection. No impact.	-	-	South Fork Roanoke River - PCB Roanoke River - PCB, Sediment, E. Coli	-
S-Y11	UNT to Mill Creek	Roanoke	37.134722	-80.135339	Perennial	RPW	R3UB2	6	Outside of Temporoary Access Road LOD; within 50ft	0	0	E&S BMP protection. No impact.	-	-	South Fork Roanoke River - PCB Roanoke River - PCB, Sediment, E. Coli	-
S-G28	UNT to Green Creek	Franklin	37.126504	-80.110642	Perennial	RPW	R3RB2	9	Outside of Pipeline LOD; within 50ft	0	0	E&S BMP protection. No impact.	-	-	Lower Blackwater River and Tributaries - Fecal Coliform Middle Blackwater River, Little Creek, and Teels Creek - Fecal Coliform South Fork Blackwater River, Lower, and Tributaries - Fecal Coliform Upper Blackwater River - Fecal Coliform, Sediment Staunton (Roanoke) River - PCB	-
S-ST24	UNT to Mill Creek	Roanoke	37.126197	-80.126614	Perennial	RPW	R3UB1	14	Outside of Pipeline LOD; within 50ft	0	0	E&S BMP protection. No impact.	-	-	South Fork Roanoke River - PCB Roanoke River - PCB, Sediment, E. Coli	-
S-RR17	UNT to Green Creek	Franklin	37.124804	-80.113774	Perennial	RPW	R3UB2	13	Outside of Permanent Access Road LOD; within 50ft	0	0	E&S BMP protection. No impact.	-	-	Lower Blackwater River & Tributaries - Fecal Coliform Middle Blackwater River, Little Creek, and Teels Creek - Fecal Coliform South Fork Blackwater River, Lower, and Tributaries - Fecal Coliform Upper Blackwater River - Fecal Coliform, Sediment Staunton (Roanoke) River - PCB	-
S-D11	UNT to North Fork Blackwater River	Franklin	37.123430	-80.085854	Perennial	RPW	R3UB1	10	Outside of Pipeline LOD; within 50ft	0	0	E&S BMP protection; no impact	-	-	North Fork Blackwater River - Fecal Coliform, Sediment, Total Phosphorus Lower Blackwater River and Tributaries - Fecal Coliform Middle Blackwater River, Little Creek, and Teels Creek - Fecal Coliform Upper Blackwater River - Fecal Coliform, Sediment Staunton (Roanoke) River - PCB	-
S-HH3	UNT to North Fork Blackwater River	Franklin	37.120853	-80.084279	Perennial	RPW	R3UB1	12	Outside of Permanent Access Road LOD; within 50ft	0	0	E&S BMP protection. No impact.	-	-	North Fork Blackwater River - Fecal Coliform, Sediment, Phosphorus Lower Blackwater River & Tributaries - Fecal Coliform Middle Blackwater River, Little Creek, Teels Creek - Fecal Coliform Upper Blackwater River - Fecal Coliform, Sediment Staunton (Roanoke) River - PCB	-
S-GH3	UNT to Teels Creek	Franklin	37.089755	-79.956688	Perennial	RPW	R4SB3	6	Outside of Pipeline LOD; within 50ft	0	0	E&S BMP protection; no impact	-	-	Lower Blackwater River and Tributaries - Fecal Coliform Middle Blackwater River, Little Creek, and Teels Creek - Fecal Coliform Staunton (Roanoke) River - PCB	-
S-E28	Teels Creek	Franklin	37.089459	-79.962097	Perennial	RPW	R3UB1	8	Outside of Pipeline LOD; within 50ft	0	0	E&S BMP protection; no impact	-	-	Lower Blackwater River and Tributaries - Fecal Coliform Middle Blackwater River, Little Creek, and Teels Creek - Fecal Coliform Staunton (Roanoke) River - PCB	-
S-IJ11	Little Creek	Franklin	37.089417	-80.005244	Perennial	RPW	R2UB1	3	Outside of Pipeline LOD; within 50ft	0	0	E&S BMP protection. No impact.	-	-	Lower Blackwater River & Tributaries - Fecal Coliform Middle Blackwater River, Little Creek, and Teels Creek - Fecal Coliform Staunton (Roanoke) River - PCB	-
S-IJ10	Little Creek	Franklin	37.088574	-80.003614	Perennial	RPW	R3RB1	3	Outside of Groundbed LOD; within 50ft	0	0	E&S BMP protection; no impact	-	-	Lower Blackwater River & Tributaries - Fecal Coliform Middle Blackwater River, Little Creek, and Teels Creek - Fecal Coliform Staunton (Roanoke) River - PCB	-
S-E28	Teels Creek	Franklin	37.088450	-79.950951	Perennial	RPW	R3UB1	8	Outside of Pipeline LOD; within 50ft	0	0	E&S BMP protection; no impact	-	-	Lower Blackwater River and Tributaries - Fecal Coliform Middle Blackwater River, Little Creek, and Teels Creek - Fecal Coliform Staunton (Roanoke) River - PCB	-
S-E28-Braid	Teels Creek	Franklin	37.088196	-79.950501	Perennial	RPW	R2UB2	5	Outside of Pipeline LOD; within 50ft	0	0	E&S BMP protection. No impact.	-	-	Lower Blackwater River and Tributaries - Fecal Coliform Middle Blackwater River, Little Creek, and Teels Creek - Fecal Coliform Staunton (Roanoke) River - PCB	-
S-E28	Teels Creek	Franklin	37.086259	-79.948996	Perennial	RPW	R3UB1	8	Outside of Pipeline LOD; within 50ft	0	0	E&S BMP protection; no impact	-	-	Lower Blackwater River and Tributaries - Fecal Coliform Middle Blackwater River, Little Creek, and Teels Creek - Fecal Coliform Staunton (Roanoke) River - PCB	-
S-E28	Teels Creek	Franklin	37.085007	-79.947457	Perennial	RPW	R3UB1	8	Outside of Pipeline LOD; within 50ft	0	0	E&S BMP protection; no impact	-	-	Lower Blackwater River and Tributaries - Fecal Coliform Middle Blackwater River, Little Creek, and Teels Creek - Fecal Coliform Staunton (Roanoke) River - PCB	-
S-EF5	Teels Creek	Franklin	37.079354	-79.942469	Perennial	RPW	R2UB1	30	Outside of Pipeline LOD; within 50ft	0	0	E&S BMP protection. No impact.	-	-	Lower Blackwater River and Tributaries - Fecal Coliform Middle Blackwater River, Little Creek, and Teels Creek - Fecal Coliform Staunton (Roanoke) River - PCB	-
S-MM41	Teels Creek	Franklin	37.073413	-79.937967	Perennial	RPW	R2UB1	20	Outside of Pipeline LOD; within 50ft	0	0	E&S BMP protection. No impact.	-	-	Lower Blackwater River & Tributaries - Fecal Coliform Maggodee Creek and Mollie Branch - Fecal Coliform Staunton (Roanoke) River - PCB	-
S-EF12	Teels Creek	Franklin	37.073328	-79.940376	Perennial	RPW	R2UB1	20	Outside of Pipeline LOD; within 50ft	0	0	E&S BMP protection; no impact	-	-	Lower Blackwater River and Tributaries - Fecal Coliform Middle Blackwater River, Little Creek, and Teels Creek - Fecal Coliform Staunton (Roanoke) River - PCB	-
S-MM41	Teels Creek	Franklin	37.073083	-79.937630	Perennial	RPW	R2UB1	20	Outside of Pipeline LOD; within 50ft	0	0	E&S BMP protection; no impact	-	-	Lower Blackwater River & Tributaries - Fecal Coliform Maggodee Creek and Mollie Branch - Fecal Coliform Staunton (Roanoke) River - PCB	-
S-EF15	Teels Creek	Franklin	37.069621	-79.934293	Perennial	RPW	R2UB1	30	Outside of Pipeline LOD; within 50ft	0	0	E&S BMP protection. No impact.	-	-	Lower Blackwater River and Tributaries - Fecal Coliform Middle Blackwater River, Little Creek, and Teels Creek - Fecal Coliform Staunton (Roanoke) River - PCB	-
S-C12	UNT to Teels Creek	Franklin	37.068809	-79.922934	Perennial	RPW	R3UB1	35	Outside of Pipeline LOD; within 50ft	0	0	E&S BMP protection. No impact.	-	-	Lower Blackwater River and Tributaries - Fecal Coliform Middle Blackwater River, Little Creek, and Teels Creek -Fecal Coliform Staunton (Roanoke) River - PCB	-
S-C13	UNT to Teels Creek	Franklin	37.063979	-79.921572	Perennial	RPW	R3UB1	25	Outside of Pipeline LOD; within 50ft	0	0	E&S BMP protection. No impact.	-	-	Lower Blackwater River and Tributaries - Fecal Coliform Middle Blackwater River, Little Creek, and Teels Creek -Fecal Coliform Staunton (Roanoke) River - PCB	-

Table 1. Perennial Streams with Designations

Stream ID	NHD Stream Name[1]	County	Latitude[2]	Longitude[2]	Flow Regime	Water Type[3]	Cowardin[4]	Top of Bank Width (ft)	Project Activity	Temporary Impact (linear ft)	Permanent Impact (linear ft)	Notes	Stream Designation[5]	T&E Species[6]	TMDL Watersheds with Established TMDL's[7]	Public Water Supply[8]
S-C14	Teels Creek	Franklin	37.062057	-79.920947	Perennial	RPW	R2UB1	50	Outside of Pipeline LOD; within 50ft	0	0	E&S BMP protection; no impact	-	-	Lower Blackwater River and Tributaries - Fecal Coliform Middle Blackwater River, Little Creek, and Teels Creek -Fecal Coliform Staunton (Roanoke) River - PCB	-
S-KL39	UNT to Blackwater River	Franklin	37.061629	-79.880171	Perennial	RPW	R3UB1	6.5	Outside of Pipeline LOD; within 50ft	0	0	E&S BMP protection; no impact	-	-	Lower Blackwater River & Tributaries - Fecal Coliform Maggodee Creek and Mollie Branch - Fecal Coliform Staunton (Roanoke) River - PCB	-
S-CD6	Little Creek	Franklin	37.058100	-79.917658	Perennial	RPW	R2UB1	56	Outside of Pipeline LOD; within 50ft	0	0	E&S BMP protection; no impact	-	Roanoke logperch	Lower Blackwater River and Tributaries - Fecal Coliform Middle Blackwater River, Little Creek, and Teels Creek -Fecal Coliform Staunton (Roanoke) River - PCB	-
S-S10	UNT to Maggodee Creek	Franklin	37.057692	-79.839054	Perennial	RPW	R3UB2	11	Outside of Temporary Access Road LOD; within 50ft	0	0	E&S BMP protection; no impact	-	-	Lower Blackwater River & Tributaries - Fecal Coliform Maggodee Creek and Mollie Branch - Fecal Coliform Staunton (Roanoke) River - PCB	-
S-KL37	UNT to Blackwater River	Franklin	37.053546	-79.884791	Perennial	RPW	R3UB1	10	Outside of Pipeline LOD; within 50ft	0	0	E&S BMP protection. No impact.	-	-	Lower Blackwater River & Tributaries - Fecal Coliform Maggodee Creek and Mollie Branch - Fecal Coliform Staunton (Roanoke) River - PCB	-
S-GH44	UNT to Foul Ground Creek	Franklin	37.028018	-79.772494	Perennial	RPW	R3UB2	6	Outside of Pipeline LOD; within 50ft	0	0	E&S BMP protection; no impact	-	-	Lower Blackwater River and Tributaries - Fecal Coliform Staunton (Roanoke) River - PCB	-
S-E14	UNT to Blackwater River	Franklin	36.995796	-79.735653	Perennial	RPW	R2UB2	20	Outside of Pipeline LOD; within 50ft	0	0	E&S BMP protection; no impact	-	-	Staunton (Roanoke) River - PCB	-
S-MM44	UNT to Little Jacks Creek	Franklin	36.982292	-79.687660	Perennial	RPW	R3UB1	4	Outside of Pipeline LOD; within 50ft	0	0	E&S BMP protection; no impact	-	-	Staunton (Roanoke) River - E. Coli Pigg River : Leesville Lake - E. Coli	-
S-H24	UNT to Little Jacks Creek	Franklin	36.978096	-79.681614	Perennial	RPW	R3UB2	10	Outside of Pipeline LOD; within 50ft	0	0	E&S BMP protection; no impact	-	-	Staunton (Roanoke) River - E. Coli Pigg River : Leesville Lake - E. Coli	-
S-H21	UNT to Turkey Creek	Franklin	36.973731	-79.673046	Perennial	RPW	R3UB1	11	Outside of Pipeline LOD; within 50ft	0	0	E&S BMP protection. No impact.	-	-	Staunton (Roanoke) River - E. Coli Pigg River : Leesville Lake - E. Coli	-
S-G13	Parrot Branch	Franklin	36.966935	-79.630967	Perennial	RPW	R2UB1	8	Outside of Pipeline LOD; within 50ft	0	0	E&S BMP protection; no impact	-	Orangefin madtom	Staunton (Roanoke) River - E. Coli Pigg River - Leesville Lake - E. Coli	-
S-Q9	UNT to Pigg River	Pittsylvania	36.933346	-79.535449	Perennial	RPW	R3UB2	4	Outside of Temporoary Access Road LOD; within 50ft	0	0	E&S BMP protection. No impact.	-	-	Staunton (Roanoke) River - E. Coli Pigg River : Leesville Lake - E. Coli	-
S-CC16	UNT to Harpen Creek	Pittsylvania	36.912976	-79.484825	Perennial	RPW	R3US2	11	Outside of Pipeline LOD; within 50ft	0	0	E&S BMP protection; no impact	-	-	Staunton (Roanoke) River - E. Coli Pigg River - Leesville Lake - E. Coli	-
S-CC6	UNT to Cherrystone Creek	Pittsylvania	36.899191	-79.462912	Perennial	RPW	R3UB2	8	Outside of Pipeline LOD; within 50ft	0	0	E&S BMP protection. No impact.	-	-	Banister River - E. Coli Cherrystone Creek - E. Coli	-
S-Q4	UNT to Pole Bridge Branch	Pittsylvania	36.886195	-79.430434	Perennial	RPW	R3UB2	5	Outside of Pipeline LOD; within 50ft	0	0	E&S BMP protection; no impact	-	-	Banister River - E. Coli Cherrystone Creek - E. Coli	-
S-Q2	UNT to Pole Bridge Branch	Pittsylvania	36.884100	-79.426676	Perennial	RPW	R3UB3	7	Outside of Pipeline LOD; within 50ft	0	0	E&S BMP protection; no impact	-	-	Banister River - E. Coli Cherrystone Creek - E. Coli	-
S-ZZ2	UNT to Pole Bridge Branch	Pittsylvania	36.877522	-79.415636	Perennial	RPW	R3UB2	6	Outside of Pipeline LOD; within 50ft	0	0	E&S BMP protection. No impact.	-	-	Banister River - E. Coli Cherrystone Creek - E. Coli	-
S-B9	UNT to Pole Bridge Branch	Pittsylvania	36.877517	-79.415932	Perennial	RPW	R3UB1	7	Outside of Pipeline LOD; within 50ft	0	0	E&S BMP protection; no impact	-	-	Banister River - E. Coli Cherrystone Creek - E. Coli	-
S-B9	UNT to Pole Bridge Branch	Pittsylvania	36.877377	-79.416868	Perennial	RPW	R3UB1	7	Outside of Pipeline LOD; within 50ft	0	0	E&S BMP protection; no impact	-	-	Banister River - E. Coli Cherrystone Creek - E. Coli	-
S-B1	Little Cherrystone Creek	Pittsylvania	36.850491	-79.381224	Perennial	RPW	R2UB2	10	Outside of Pipeline LOD; within 50ft	0	0	E&S BMP protection. No impact.	-	-	Banister River - E. Coli	-
S-GG12	Little Cherrystone Creek	Pittsylvania	36.837557	-79.361024	Perennial	RPW	R2UB2	12	Outside of Pipeline LOD; within 50ft	0	0	E&S BMP protection. No impact.	-	-	Banister River - E. Coli	-
S-H4	Little Cherry Stone Creek	Pittsylvania	36.833678	-79.359068	Perennial	RPW	R2UB2	30	Outside of Pipeline LOD; within 50ft	0	0	E&S BMP protection. No impact.	-	-	Banister River - E. Coli	-
S-H44	UNT to Little Cherrystone Creek	Pittsylvania	36.830326	-79.345655	Perennial	RPW	R3UB2	8	Outside of Pipeline LOD; within 50ft	0	0	E&S BMP protection; no impact	-	-	Banister River - E. Coli	-
S-H44	UNT to Little Cherrystone Creek	Pittsylvania	36.829505	-79.346331	Perennial	RPW	R3UB2	8	Outside of Pipeline LOD; within 50ft	0	0	E&S BMP protection; no impact	-	-	Banister River - E. Coli	-
S-H41	UNT to Little Cherrystone Creek	Pittsylvania	36.828195	-79.343341	Perennial	RPW	R3UB3	10	Outside of Pipeline LOD; within 50ft	0	0	E&S BMP protection. No impact.	-	-	Banister River - E. Coli	-

Notes:

1 - For identified streams without a NHD (National Hydrography Dataset) name, the identified stream was given the name, "Unidentified Tributary (UNT)", of the first named receiving waterbody

2 - In decimal degrees

3 - RPW = Relatively Permanent Waters
- NRPW = Non-Relatively Permanent Waters
- TNW = Traditional Navigable Waters

4 - See Cowardin et al., 1979

5 - Trout Waters - Cold Water Stream Survey (CWSS) - https://www.dgif.virginia.gov/gis/data/
- Wild Trout - VA DGIF Trout Stream Classification Class I-IV (VA DEQ Natural trout waters Class VI)
- Stockable Trout - VA DGIF Trout Stream Classification Class V-VI (VA DEQ Stockable trout waters Class V)
- Tier III Exceptional Waterbodies - No Tier III Exceptional Waterbodies crossed by the Project.
-Tier III data from: http://www.deq.virginia.gov/Programs/Water/WaterQualityInformationTMDLs/WaterQualityStandards/ExceptionalStateWaters(TierIII).aspx
- Anadromous Fish Use Areas - No Anadromous Fish Use Areas crossed by the Project.
- Anadromous Fish Use Area data from: https://www.dgif.virginia.gov/gis/data/download/

6 - T&E species information from Project field surveys and USFWS and VDGIF agency coordination
- Green floater - *Lasmigona subviridis* ; state threatened in Virginia
- James spinymussel - *Pleurobema collina* ; federal endangered species
- Orangefin madtom - *Noturus gilberti* ; state threatened in Virginia
- Roanoke logperch - *Percina rex* ; federal endangered species
- Yellow lampmussel - *Lampsilis cariosa* ; state species of concern in Virginia

7 TMDL Watersheds with Established TMDL's from:
- Virginia Environmental Geographic Information Systems Available DEQ Datasets, TMDL_IP_Watersheds_Geodatabase. http://www.deq.virginia.gov/ConnectWithDEQ/VEGIS/VEGISDatasets.aspx

8 - Public Water Supply information from:
- 2014 305(b)/303(d) Water Quality Assessment Integrated Report. http://www.deq.virginia.gov/Programs/Water/WaterQualityInformationTMDLs/WaterQualityAssessments/2014305(b)303(d)IntegratedReport.aspx.

Appendix 2:
Acid Forming Materials Identification and Mitigation Plan

625 Liberty Avenue, Suite 1700 | Pittsburgh, PA 15222
844-MVP-TALK | mail@mountainvalleypipeline.info
www.mountainvalleypipeline.info

May 9, 2017

Ms. Kimberly D. Bose, Secretary
Federal Energy Regulatory Commission
888 First Street NE
Washington, DC 20426

Re: Mountain Valley Pipeline, LLC
Docket No. CP16-10-000
Responses to Data Requests issued March 20, 2017

Dear Ms. Bose:

On March 20, 2017, the Office of Energy Projects ("OEP") of the Federal Energy Regulatory Commission ("Commission") issued data requests to Mountain Valley Pipeline, LLC ("Mountain Valley") with respect to Mountain Valley's certificate application in Docket No. CP16-10-000. On various dates, Mountain Valley submitted responses to the requests. In this filing, Mountain Valley submits a supplemental response.

If you have any questions, please do not hesitate to contact me at (412) 553-5786 or meggerding@eqt.com. Thank you.

Respectfully submitted,

Mountain Valley Pipeline, LLC

Matthew Eggerding
Counsel, Midstream

Attachments

cc: All Parties
Paul Friedman, OEP
Lavinia DiSanto, Cardno, Inc.
Doug Mooneyhan, Cardno, Inc.

Mountain Valley Pipeline, LLC
Mountain Valley Pipeline Project
Docket No. CP16-10-000

Response to Post-Draft Environmental Impact Statement
Environmental Information Request #2 Issued March 20, 2017

General Project Description

1. Provide the following revised plans that Mountain Valley indicated in February 2017 filings are being updated based on agency consultations:

   c. Acid Forming Materials Identification and Mitigation Plan;

Response Submitted March 30, 2017:

   c. Mountain Valley is finalizing the Acid Forming Materials Identification and Mitigation Plan and expects to submit it by April 7, 2017.

Supplemental Response Submitted April 7, 2017:

   c. Mountain Valley expects to submit the Acid Forming Materials Identification and Mitigation Plan in the second half of April 2017.

Supplemental Response Submitted May 9, 2017:

   c. The Acid Forming Materials Mitigation Plan is included as Attachment DR5 General 1c.

Respondent: Ricky Myers
Position: Engineering Manager
Phone Number: 724-873-3640

Mountain Valley Pipeline Project

Docket No. CP16-10-000

Attachment DR5 General 1c

May 2017

ACID FORMING MATERIALS MITIGATION PLAN

Prepared for:

Mountain Valley Pipeline

Suite 1700

625 Liberty Avenue

Pittsburgh, PA 15222-3111

May 2017

Prepared by:

Draper Aden Associates

Engineering • Surveying • Environmental Services

DAA Project Number: B14188B-01

TABLE OF CONTENTS

1.0 INTRODUCTION

The normal range of soil pH in the eastern USA is between approximately pH 4.5 and 6.5 and virtually all native soils have pH levels > 4.0 (Weil and Brady, 2017). However, acid forming soil or bedrock, generally referred to as Acid Forming Materials (AFM) that are exposed to surface conditions in trenches, disturbed ground or backfills will oxidize over time (weeks to years) to produce acidic soil byproduct and drainage conditions with typical pH range between 2.0 and 3.8 and enriched in soluble elements.

Naturally occurring geologic materials are inherently variable in mineralogic composition, and as a result may not be ubiquitously susceptible to acid-forming conditions. For example, a shale formation identified as a potential AFM likely does not have a consistent mineral distribution and therefore some exposures may result in acidic weathering conditions while other exposures within the same shale may not. The AFM may also contain acid-neutralizers (e.g. carbonates) in sufficient amounts to partially or fully offset the acid loads generated. Field observations and qualitative testing in areas identified to be potential AFM will be used to identify whether an area of land disturbance is moderate-risk or high-risk for net-acid producing conditions, and appropriate mitigation employed based upon conservative worst-case assumptions.

Potential AFM in areas traversed by the Mountain Valley Pipeline project (Project) include Devonian Age black shales in southwestern Virginia, and sulfidic metamorphic and igneous bedrock in south-central Virginia (Figure 1 through Figure 4, discussed below). These formations may potentially produce acidic (pH < 4.0) soils or drainage when exposed to surface conditions.

1.1 Purpose of the AFM Mitigation Plan

The purpose of the AFM Mitigation Plan is to identify specific locations and relative risks for AFM to generate acid-producing conditions resulting from land disturbance, and to prescribe appropriate mitigation measures to prevent acidic surface soil conditions and runoff from AFM backfill and spoils.

This Mitigation Plan includes a desktop review to identify areas where potential AFM may be encountered during land disturbance associated with Project components. As an example, Figure 1 is a depiction of the Virginia State Sulfide Hazard Risk Map (Soil and Landscape Rehabilitation,

2017) with the proposed Project alignment overlay. As depicted, there are areas where the proposed Project alignment will traverse known or suspected AFM.

The Mitigation Plan directs that during construction, Mountain Valley will identify areas that require specific evaluation for potential AFM, and coordinate applicable and prescribed mitigation measures. The applicable mitigation measures are dependent upon the nature of land disturbance (e.g., trenching, backfill, spoils stockpiling, etc.). Appropriate application of agricultural lime and fertilizer can mitigate AFM and resulting low-pH drainage to allow for permanent revegetation (Orndorff et al., 2008). As a frame of reference, one acre of typical native soil or weathered saprolite material six (6) inches deep weighs approximately 1,000 dry tons and typical liming rates for AFM in Virginia commonly range into the tens of tons of agricultural lime per acre. In areas of known AFM occurrence, approximately one acre of potential AFM will be exposed for every 550 linear feet of pipeline trench excavated. Actual volumes of AFM excavated per linear mile will vary based on actual thickness of the sulfidic materials.

In summary, and as detailed below, appropriate risk management for AFM involves a combination of:

(a) *a priori* desk-top identification of possible AFM from published sources, previous experience, and based on well-documented field observation procedures,

(b) application of agricultural lime to exposed AFM in trenches as well as spoil piles generated during excavation, and/or,

(c) application of agricultural lime to AFM spoils on exposed corridor surfaces or in fill areas to prevent AMD from runoff or leaching.

2.0 DESKTOP REVIEW FOR AFM AREAS OF CONCERN

A desktop review identified potential AFM strata in areas of proposed land disturbance for Project components. Existing scientific literature and state geologic surveys (Soil and Landscape Rehabilitation, 2017; DMME, 2003) were utilized for the desktop review. In general, the highest likelihood for AFM occurrence associated with the proposed Project alignment is present in 1) Valley & Ridge Devonian shales, and 2) certain Blue Ridge and Piedmont rock units (e.g. the Ashe Formation) (Figure 1).

The results of the desktop review are presented in Figure 2 and Figure 3 (black shales) and Figure 4 (along geologic strike of the Ashe Formation traversed by the proposed alignment), and suggest where potential AFM may be present by milepost:

- Figure 2 – Milepost 219.08 to 219.45 and Milepost 220.70 and 221.45, which is approximately 1.1 miles of potential AFM;
- Figure 3 – Milepost 228.9 to 229.7, which is approximately 0.8 mile of potential AFM;
- Figure 4 – Milepost 259 to 260 and Milepost 261.5 to 266.3 and Milepost 267.5 to 273.8 and Milepost 275.5 to 277, which is approximately 13.6 miles of potential AFM.

The sulfide hazard rating from which this desktop review is based, was completed from detailed field, laboratory, and literature studies previously completed (Soil and Landscape Rehabilitation, 2017), and projection of potential AFM along geologic strike of the Ashe Formation (DMME, 2003).

3.0 FIELD TESTING

A specifically trained Mountain Valley Environmental Inspector will be deployed on-site during land disturbance in areas identified by the desktop review to have potential AFM. The Inspector will conduct field observations to identify potential moderate-risk and high-risk AFM, and if conformed to coordinate with Mountain Valley the management of spoils and application of neutralization amendments to excavated rock materials. Detailed logs will be recorded of materials encountered during excavation, noting at minimum the soil horizon and strata, depths and colors (hue/value/chroma), including depth and thickness of the partially weathered “saprolite zone”.

Where deemed necessary by Mountain Valley, the Environmental Inspector will conduct a qualitative field analytical procedure to identify moderate- and high-risk AFM, and the limits of lime application. A 30% hydrogen peroxide (H_2O_2) test is well-documented for rapid determination in the field of potentially reactive AFM (i.e., rapidly oxidizes sulfidic materials) via evolution of heat, vigorous frothing and water vapor (Watling et al., 2017). Low to moderate reaction would be characterized as representing moderate-risk AFM, while highly reactive results will be characterized as high-risk AFM. In lieu of testing, Mountain Valley may elect to apply agricultural lime (as described below) at a rate equivalent to the identified AFM risk depicted on the Virginia Sulfide Hazard Risk Map (Soil and Landscape Rehabilitation, 2017).

4.0 MITIGATION STRATEGIES

A general estimation of tons of agricultural lime (or other appropriate fine-grained acid-neutralizing materials) required to neutralize 1,000T of excavated material typically ranges from 5 to 20T per 1,000T. However, certain AFM materials (e.g., black shales) can range up to 50T per 1,000T. The following outline describes mitigation strategies to be implemented in areas identified as moderate- to high-risk AFM (>5T agricultural lime demand per 1,000T) as described above.

Mountain Valley's Environmental Inspectors will coordinate mitigation measures in the field. The relevant mitigation strategies are dependent upon the nature and volume of land disturbance (e.g., trenching, backfill, spoils stockpiling, etc.).

The overall mitigation strategy will proceed as follows:

1. The Environmental Inspector will identify when land disturbance is occurring in moderate to high-risk AFM areas identified in the desktop study (i.e., Figures 2 through 4).

2. The Environmental Inspector will evaluate relative AFM risk based on field observations and coordinate with Mountain Valley for potential testing described above.

3. Apply agricultural lime (pelletized or ground powdered) to the disturbed land (excavation walls and base, shallow disturbed bedrock or soils) as follows:

    a. Where observed soil/geologic material color, weathering depth, rock hardness and field H_2O_2 testing indicate moderate risk, lime will be applied at a rate of 20T of agricultural lime per 1,000T dry material.

    b. Where observed soil/geologic material color, weathering depth, rock hardness and field H_2O_2 testing indicate high risk, the lime will be applied at a rate of 50T agricultural lime per 1,000T dry material.

    c. As noted above, in lieu of testing, Mountain Valley may elect to apply agricultural lime at a rate equivalent to the identified AFM risk depicted on the Virginia Sulfide Hazard Risk Map (Soil and Landscape Rehabilitation, 2017).

d. Lime applied to trench walls and the trench-facing side of overburden spoil piles will be applied as a ground powdered material to a wetted surface or as a lime/water slurry to ensure adhesion. The backside of the spoil piles will be treated with similar lime materials as above, but due to access may require treatment by hand.

4. Return appropriately limed AFM to the trench backfill and compact where possible to limit internal permeability.

    a. The upper 12 to 18 inches of backfill should be left loosened to support plant growth for post-construction reclamation.

5. Excess AFM material that cannot be returned to the trench backfill due to construction factors (e.g. the pipe diameter) or concerns over net swell, will be bulk-blended with agricultural lime at the applicable moderate-risk or high-risk rate (i.e., 20T or 50T per 1,000T) and placed in accordance with Mountain Valley's standard practice for excess spoils. This excess material should not be placed within an area that may become saturated.

5.0 REFERENCES

DMME, 2003. Digital Representation of the 1993 Geologic Map of Virginia; 1:500,000 U.S. Geological Survey, 2003. (Virginia Division of Mineral Resources Publication 174)

Orndorff Z. W., W. L. Daniels, D. Fanning. 2008. Reclamation of Disturbed Sulfidic Coastal Plain Sediments Using Lime-Stabilized Biosolids. J. Env. Quality 37:1447-1455.

Soil and Landscape Rehabilitation. 2017. www.landrehab.org/content.aspx?ContentID=1382

Watling, K.M., C.R. Ahern and K.M. Hey. 2017. Acid Sulfate Soil pH Tests. Queensland Environment, Land and Water. scu.edu.au/eal/download.php?doc_id=4556&site_id=214

Weil, R.R. and N.C. Brady. The Nature and Properties of Soils. 2016. Pearson/Prentice Hall, 15th Edition. 1086 p.

6.0 FIGURES

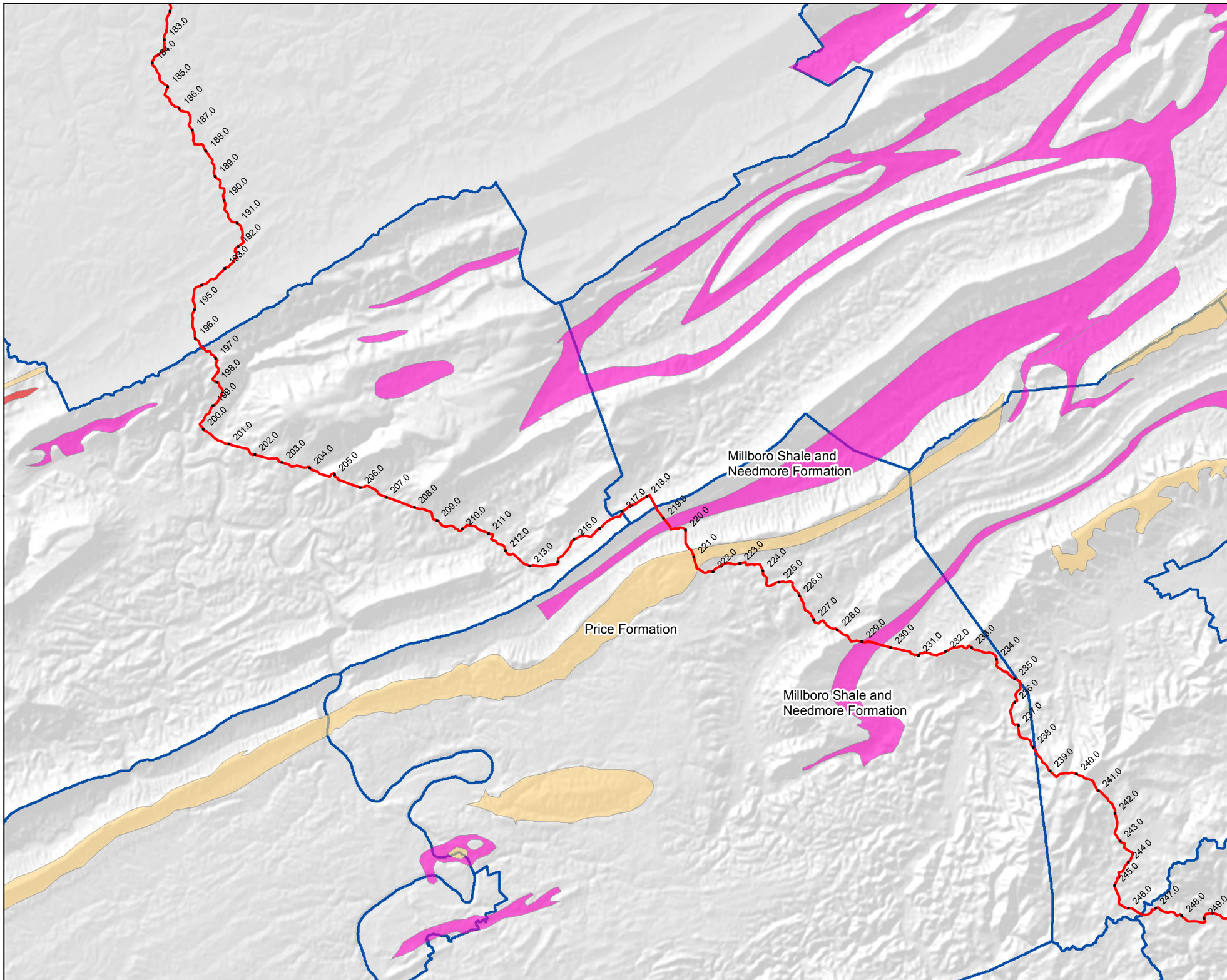

Mountain Valley Pipeline Project

Mountain Valley PIPELINE

FIGURE NUMBER 1
Sulfide Hazard Risk in Virginia

03-17-17

Draper Aden Associates
Engineering • Surveying • Environmental Services

Legend

- Proposed Route (with Mile Posts)
- Mod-high risk
- High risk
- Sulfides documented in literature, risk unknown

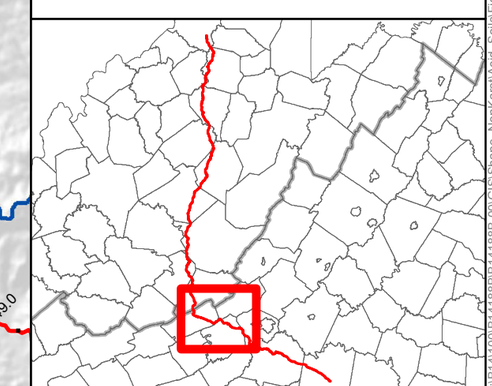

Virginia State Sulfide Hazard Risk Map
http://landrehab.org/content.aspx?ContentID=1382

Document Path: P:\B14100\B14188B\B14188B-00\GIS\Shape_NonKarst\Acid_Soils\Fig-1 Sulfide Hazard v2.mxd

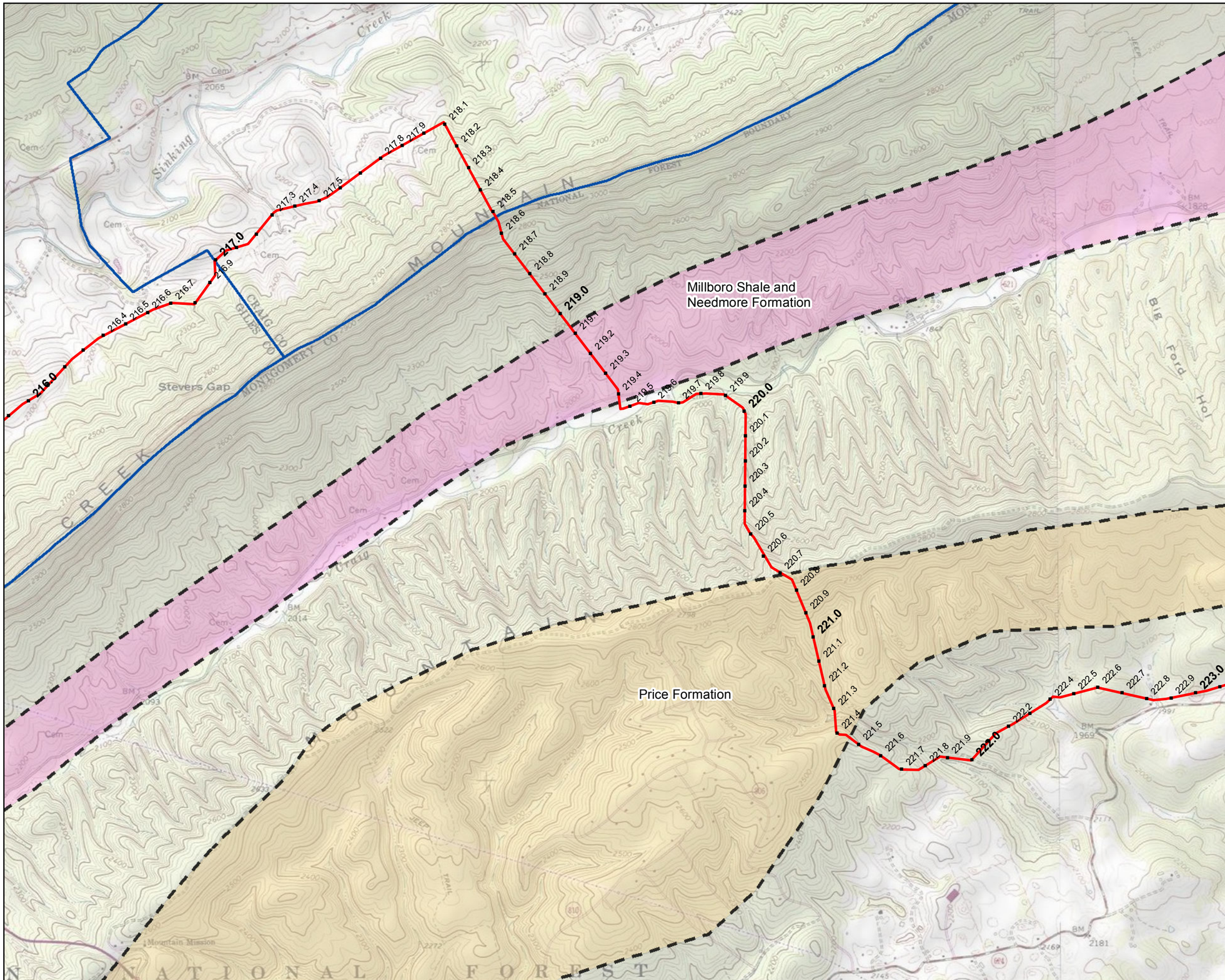

Service Layer Credits: Copyright:© 2013 National Geographic Society, i-cubed

Mountain Valley Pipeline Project

Mountain Valley PIPELINE

FIGURE NUMBER 2
Sulfide Hazard Risk in Virginia
Locations 1 and 2

04-27-17

Draper Aden Associates
Engineering • Surveying • Environmental Services

Legend

- Proposed Route (with Mile Posts)
- Mod-high risk
- Sulfides documented in literature, risk unknown

Locations are Approximate

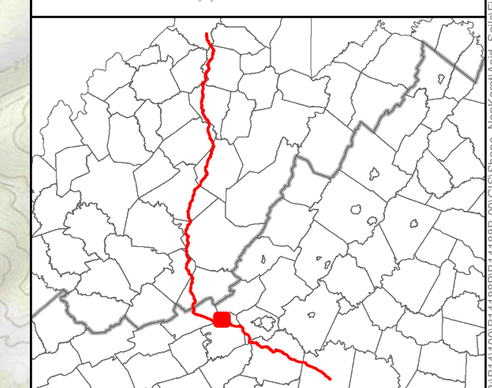

Virginia State Sulfide Hazard Risk Map
http://landrehab.org/content.aspx?ContentID=1382
(Units are derived from a state-wide scale map)

Document Path: P:\B14\100\B14188B\B14188B-00\GIS\Shape_NonKarst\Acid_Soils\Fig-2 Sulfide Hazard Loc1and2.mxd

Mountain Valley Pipeline Project

Mountain Valley PIPELINE

FIGURE NUMBER 3
Sulfide Hazard Risk in Virginia
Location 3

04-27-17

Draper Aden Associates
Engineering • Surveying • Environmental Services

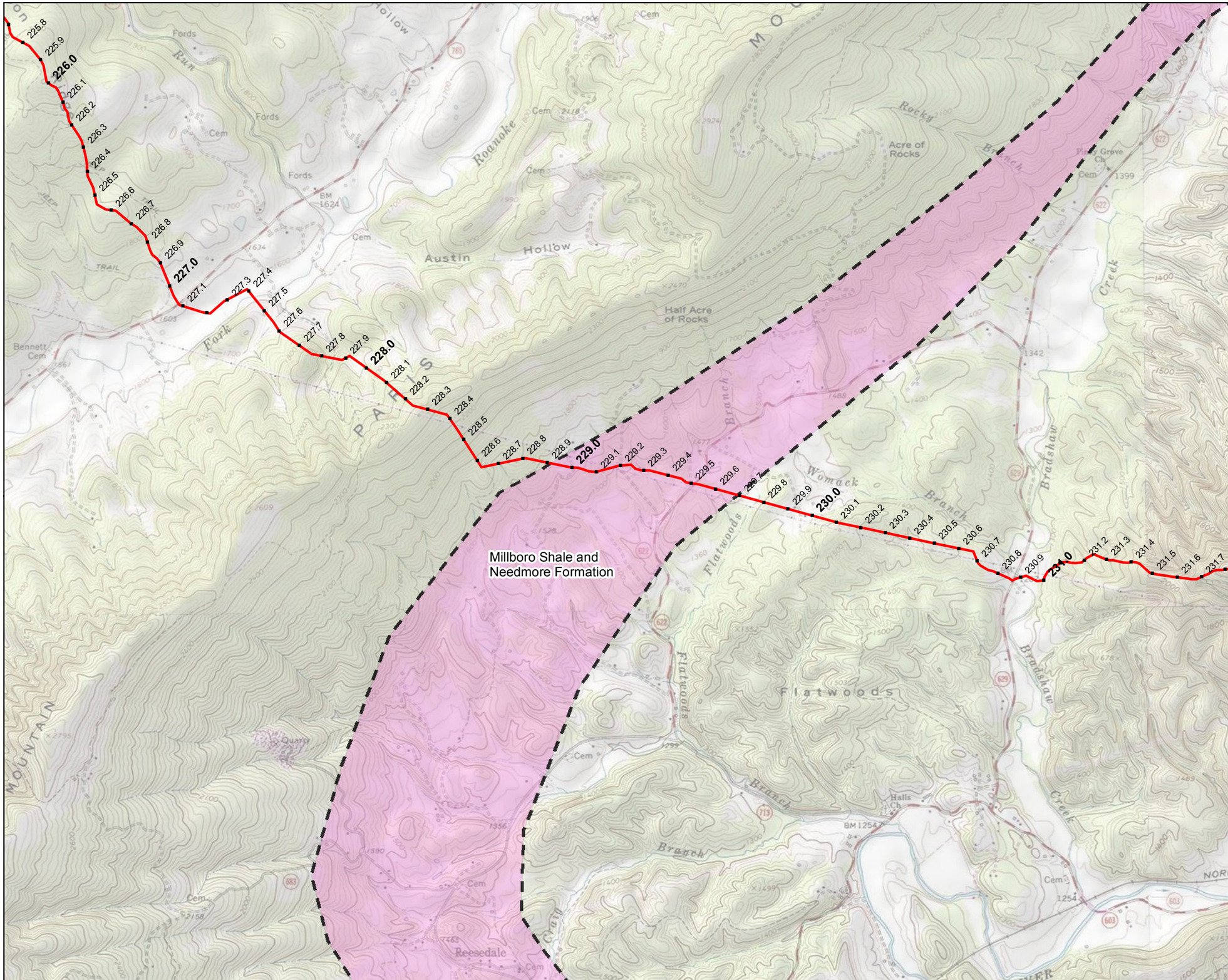

Service Layer Credits: Copyright:© 2013 National Geographic Society, i-cubed

Legend

Proposed Route (with Mile Posts)

Mod-high risk

Locations are Approximate

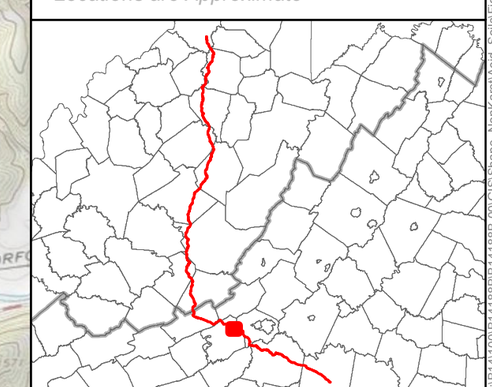

Virginia State Sulfide Hazard Risk Map
http://landrehab.org/content.aspx?ContentID=1382
(Units are derived from a state-wide scale map)

Document Path: P:\B14\100\B14188\B14188B-00\GIS\Shape_NonKarst\Acid_Soils\Fig-3 Sulfide Hazard Loc3.mxd

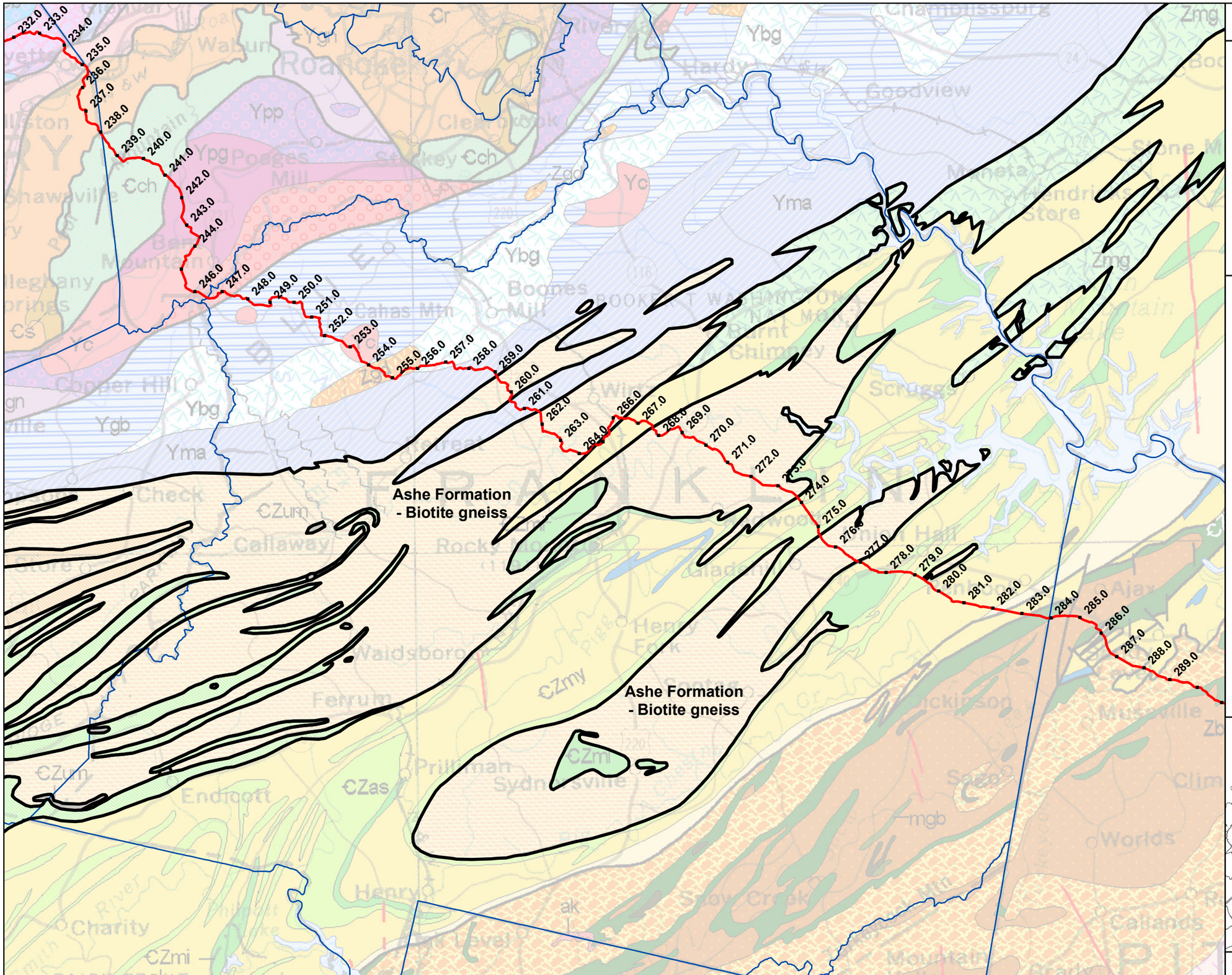

Mountain Valley Pipeline Project

Mountain Valley PIPELINE

FIGURE NUMBER 4
Sulfide Hazard Risk in Virginia
Ashe Formation

04-27-17

Draper Aden Associates
Engineering • Surveying • Environmental Services

Legend

Proposed Route (with Mile Posts)

Locations are Approximate

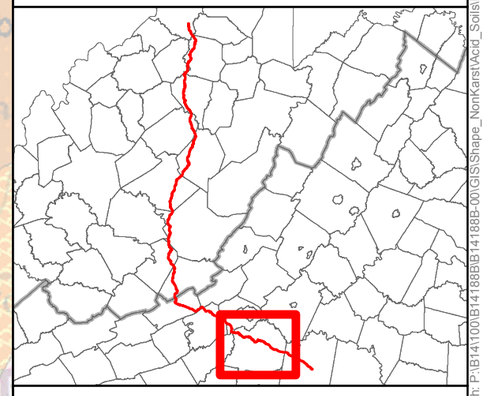

Digital Representation of the 1993 Geologic Map of Virginia; 1:500,000
U.S. Geological Survey, 2003
(Virginia Division of Mineral Resources Publication 174)

N

1:200,000

NAD 1983 UTM 17N

0 2 4 6 Miles

Service Layer Credits:

Document Path: P:\B14100\B14188B\B14188B-00\GIS\Shape_NonKarst\Acid_Soils\Fig-4 Sulfide Hazard Ashe.mxd

Appendix 3:
Fugitive Dust Control Plan

Mountain Valley Pipeline, LLC
Mountain Valley Pipeline Project
Docket No. CP16-10-000

Responses to FERC Environmental Information Request
Dated December 24, 2015

ATTACHMENTS

Attachment General 1-g

Mountain Valley Pipeline Project

Docket No. CP16-10-000

Fugitive Dust Control Plan

January 2016

Table of Contents

1.0 Introduction

Land disturbance from clearing and excavation activities has the potential to generate a large amount of dust particles. Dust control measures are practices that help reduce surface and air movement of dust from disturbed soil surfaces.

Mountain Valley Pipeline, LLC (MVP) has developed this Fugitive Dust Control Plan to minimize visible fugitive dust emissions at or in proximity to the worksite. Fugitive dust is generated by the mechanical disturbance of granular material exposed to air. Dust from open sources is termed "fugitive" because it is not discharged to the atmosphere in a confined flow stream. This plan outlines dust control methods, that will be used on the Project to reduce fugitive dust emissions and outlines the recommended records to be maintained onsite during construction.

2.0 Fugitive Dust Emission Sources

The following Project activities have the potential to generate fugitive dust:

- Vegetation removal;
- Clearing and grading;
- Topsoil removal;
- Cutting and filling;
- Trenching;
- Backfilling;
- Track-out onto roads;
- Bulk material loading, hauling and unloading;
- Vehicle and motorized equipment movement on unpaved access roads;
- Use of material storage piles; and
- Use of parking, staging, and storage area.

Strategic construction sequencing can greatly reduce problematic dust generation. If land disturbance is required, additional temporary stabilization measures should be considered prior to initiating grading activities.

It is the responsibility of the Project contractor(s) and the designated Environmental Inspector(s) to ensure that contractor personnel are complying with all dust control measures and have authority to enforce and require compliance with this plan. The Project supervisors and EI's must ensure that:

1. sources of potential dust generation are identified;
2. specific areas of Project construction will be monitored for fugitive dust generation; and
3. appropriate dust suppression techniques are implemented when dust plumes are visible.

3.0 Fugitive Dust Control Methods

Implementation of construction and restoration Best Management Practices and operational controls will be used to mitigate fugitive dust emissions. The project earth disturbance permit will outline specific practices that control fugitive dust, including a construction sequence; use of rock construction entrances; and temporary soil stabilization methods. Operational controls are also implemented, including the use of a reduced speed limit on unpaved access roads as well as sweeping/vacuuming paved roadways when Project-related soils are tracked out onto paved surfaces.

Wet suppression, using water, is the predominate method of suppressing fugitive dust on unpaved roads and gravel pads as it causes finer materials to adhere into larger particles. Increasing the moisture content of the finer materials may be accomplished either naturally or mechanically. Moisture content of unpaved road surfaces can be naturally increased through rainfall. Moisture content can also be increased mechanically through the application of water. The amount of water required to sufficiently control fugitive dust emissions is dependent on the characteristics of materials (e.g., surface moisture content), ambient conditions (e.g., rainfall, humidity, temperature), activities occurring in the area (e.g., vehicle traffic, vehicle weight, speeds), etc. The Contractors will have one or more water trucks available per spread that will load water from approved permitted sources to spray areas for dust control. Disturbed and trafficable areas will be kept sufficiently damp during working hours in dry conditions to minimize wind-blown or traffic-generated dust emissions. Areas to be watered include, but are not limited to, the following:

- the construction corridor for each pipeline, including additional temporary workspace;
- contractor yards and staging areas;
- access roads;
- aboveground facility sites;
- active grading areas;
- un-stabilized areas;
- soil stockpiles; and
- parking areas.

The frequency at which water trucks will spray construction areas will vary based on weather and site conditions. More frequent applications will be required in dry conditions and where dust generation is likely. The following actions are taken to reduce fugitive dust from our operations.

3.1 Pipeline Construction Activities and Other Earth Disturbances

Fugitive dust emissions from vegetation removal, clearing and grading, cutting and filling, topsoil removal, trenching, backfilling and stockpile storage will be controlled to a great extent by following the construction sequencing and disturbing limited areas at a time. If sustained visible dust plumes occur, dust suppression can be achieved by applying water along the travel lane and disturbed land via water truck. Spoil piles left undisturbed for four or more days should be temporarily stabilized with seed and mulch or tarped to prevent wind and water erosion.

3.2 Unpaved Roads

Fugitive dust emissions generated by motorized equipment and miscellaneous vehicle traffic will be controlled by wet suppression as necessary. Fugitive dust emissions from active access roads will be controlled by periodic wetting of surfaces using a water truck. During periods of high truck traffic, road surfaces will be wetted more frequently to minimize dust emissions. Watering will occur less frequently if weather conditions (e.g., rain, frozen surfaces, etc.) are adequate to suppress dust. In addition, MVP will reduce the speed limit on the unpaved roads to control dust emissions

3.3 Paved Roads

Fugitive dust emissions from paved roads will be controlled with a combination of water trucks, power washers, sweeping and/or vacuuming, as appropriate, to minimize the amount of fugitive dust that is generated and built up on the road surfaces.

3.4 Track-out onto Roads

Track-out of loose materials will be controlled using rock construction entrances on access roads that begin at a junction with paved roads; this is done to prevent tracking of mud onto public roadways. Also, the use of sweeping and/or vacuuming will be used if any loose material goes beyond the rock construction entrances.

3.5 Deposition on Other Premises

MVP will take all appropriate actions to prevent the deposition of solid or liquid materials onto any other premises from the Project site and access roads that may cause or contribute to visible dust emissions. Preventive actions may include, but are not limited to dust control, such as wet suppression, the operation of a sweeper truck on paved roadways equipped with water suppression, and the operation of a vacuum truck.

4.0 Tackifiers

Contractor may propose the use of tackifiers to reduce fugitive dust provided that the product to be utilized has been approved by the appropriate federal and state agencies where its application will occur. Contractor will detail the proposed use of any such substances in their dust control plan and provide copies of the material safety data sheets and application procedures. Typically tackifiers used are DustFloc, RoadFloc and Kodiak Super TACKMixes.

5.0 Inspection, Monitoring, and Record Keeping

The construction contractor will implement the dust control measures specified in this plan. All construction personnel will be informed of the measures in this plan. Environmental Inspectors will have primary responsibility for monitoring and enforcing the implementation of dust control measures by the construction contractor. The inspectors will also be responsible for ensuring that these measures are effective and proper documentation is maintained. When environmental conditions are dry, inspection of dust control measures will be conducted daily, and the environmental inspectors will be responsible for recording the following information on a daily basis:

- weather conditions, including temperature, wind speed and wind direction;
- number of water trucks in use;
- incidents where dust concentration is such that special abatement measures must be implemented;
- condition of soils (damp, crusted, unstable, other) on the right-of-way and other construction sites;
- condition of soils (damp, crusted, unstable, other) on access roads;
- condition of track-out pads;
- overall status of dust control compliance.

This information will be incorporated into the environmental inspector’s daily report.

6.0 Plan Maintenance

A copy of this Fugitive Dust Control Plan will be retained at the spread's job site office and will be made available to the federal and state agencies upon request.

7.0 Staff Training

Prior to the start of construction, MVP will conduct environmental and safety training for Company and Contractor personnel. The training program will focus on the Federal Energy Regulatory Commission's *Upland Erosion Control, Revegetation, and Maintenance Plan* (Plan) and *Wetland and Waterbody Construction and Mitigation Procedures* (Procedures); other construction, restoration, and mitigation plans, including this *Dust Control Plan*; and applicable permit conditions. In addition, MVP will provide large-group training sessions before each work crew begins construction with periodic follow-up training for groups of newly assigned personnel.

Appendix 4:
Spill Prevention, Control, and Countermeasure (SPCC) Plan and Unanticipated Discovery of Contamination Plan

Spill Prevention, Control, and Countermeasure (SPCC) Plan
and
Unanticipated Discovery of Contamination Plan
for Construction Activities in Virginia

Submitted By:

Mountain Valley Pipeline, LLC
555 Southpointe Boulevard, Suite 200
Canonsburg, PA 15317

By means of this certification , this Plan has been prepared in accordance with good engineering practice, including consideration of applicable industry standards, and with the requirements of 40 CFR §112.3(d)

Contents

Tables

Attachments

Acronyms and Abbreviations

A	acceptable
ABACT	anti-degradation best available combination of technologies
BMP	best management practice
CFR	Code of Federal Regulations
DEQ	Virginia Department of Environmental Quality
EC	Emergency Coordinator
EPA	U.S. Environmental Protection Agency
MVP	Mountain Valley Pipeline, LLC
ESCP	Erosion and Sediment Control Plan
HDD	Horizontally Directional Drilling
ID	Identification
PCB	Polychlorinated Biphenyl
Plan	Preparedness, Prevention, and Contingency and Spill Prevention Control and Countermeasures Plan
PPC	Preparedness, Prevention, and Contingency
PPE	Personal Protective Equipment
Ppm	parts per million
Project	MVP Pipeline Project
ROW	right-of-way
SDS	Safety Data Sheet
SOP	standard operation procedure
SPCC	Spill Prevention Control and Countermeasures
SPRP	Spill Prevention and Response Plan
U	unacceptable

1.0 OVERVIEW

Mountain Valley Pipeline, LLC (MVP), a joint venture between EQT Midstream Partners, LP and affiliates of NextEra Energy, Inc.; Con Edison Gas Midstream LLC; WGL Holdings, Inc.; and RGC Midstream, LLC (collectively referred to as MVP), is seeking a Certificate of Public Convenience and Necessity (Certificate) from the Federal Energy Regulatory Commission (FERC) pursuant to Section 7(c) of the Natural Gas Act authorizing it to construct and operate the proposed Mountain Valley Pipeline Project (Project) located in 17 counties in West Virginia and Virginia. MVP plans to construct an approximately 303-mile, 42-inch-diameter natural gas pipeline to provide timely, cost-effective access to the growing demand for natural gas for use by local distribution companies, industrial users, and power generation in the Mid-Atlantic and southeastern markets, as well as potential markets in the Appalachian region. Construction is anticipated to begin in 2017 and conclude in the fourth quarter of 2018. Construction on National Forest System lands will occur in 2018.

The proposed pipeline will extend from the existing Equitrans, L.P. transmission system and other natural gas facilities in Wetzel County, West Virginia to Transcontinental Gas Pipe Line Company, LLC's (Transco) Zone 5 compressor station 165 in Pittsylvania County, Virginia. In addition to the pipeline, the Project will include approximately 171,600 horsepower of compression at three compressor stations currently planned along the route, as well as measurement, regulation, and other ancillary facilities required for the safe and reliable operation of the pipeline. The pipeline is designed to transport up to 2.0 million dekatherms per day of natural gas.

A 3.5-mile long segment of the Project will cross portions of the Jefferson National Forest (JNF) in Monroe County in southern West Virginia and in Giles, Craig, and Montgomery counties in southwestern Virginia. The JNF is managed by the U.S. Forest Service (USFS) of the U.S. Department of Agriculture. Another 60-foot segment of the Project will cross the Weston and Gauley Bridge Turnpike Trail (Weston and Gauley Turnpike) in Braxton County, West Virginia, which is administered by the U.S. Army Corps of Engineers (USACE). Approval to cross land managed by two or more federal agencies is the responsibility of the U.S. Department of the Interior, Bureau of Land Management (BLM) through issuance of a right-of-way grant. Project-wide construction environmental compliance will be the responsibility of the FERC. The USFS and USACE will also ensure compliance across lands managed or administered by those agencies. Because the majority of federal lands crossed are managed by the USFS, this plan focuses on the JNF, noting any additional or different requirements that are specific to the crossing of the Weston and Gauley Turnpike.

The USFS will be responsible for enforcement of the terms and conditions of the BLM's right-of-way grant on National Forest System lands during the term of the right-of-way grant for the Project. Compliance will be monitored on the JNF portion of this Project by the USFS Project Manager and the Authorized Officer's designated compliance monitors. USFS will have stop-work authority per terms outlined in the BLM right-of-way grant. USFS will also have stop-work authority if unsafe work conditions are encountered during construction.

The FERC will utilize a third-party Compliance Inspection Contractor (CIC) contracted to MVP to act on behalf of the agency to provide Project-wide construction oversight and monitor compliance. The CIC will inspect and monitor preconstruction and construction activities and enforce requirements related to the National Historic Preservation Act (NHPA), the Endangered Species Act (ESA), and other applicable laws and regulations. The Project will adhere to all federal, state, and local permits. The CIC will coordinate with the USFS Project Manager and designated compliance monitors.

The Project has potential to impact sensitive environmental resources and, as a result, environmental protection measures have been developed to minimize potential impacts on these resources and will be applied, as applicable, to the Project.

2.0 WASTE MANAGEMENT

This waste management section provides an overview and checklist to be used before each phase of construction begins at each spread. Each job might require different chemicals and equipment with different fuel requirements that must be documented, accounted for, and contained. Also included at the end of this section are the Weekly Hazardous Materials and Waste Inspection Log for weekly inspection of hazardous materials and waste.

2.1 Material and Waste Inventory

Prior to each phase of construction at each spread, the material and waste inventory must be completed. The inventory must be provided in the Tables 2-1 to 2-4 below and will, depending on the specific circumstances of the planned construction activity, include the following:

- Nutrients, such as fertilizers and sanitary wastes;
- Solid waste, such as scrap metals, masonry products, and other raw construction materials and debris;
- Construction chemicals, such as paints, soils additives, and acids for cleaning;
- Petroleum products, such as fuels and lubricants; and
- Other materials, including concrete wash from mixers and explosives.

The list must include oils and fuels, commercial chemicals, hazardous and nonhazardous wastes, and incompatible materials to be used or stored on site during construction.

TABLE 2-1
List of Oil and Fuel to be Used or Stored On-Site During Construction

Type	Quantity	Containment Method	Location
Notes: A Safety Data Sheet (SDS) for all hazardous substances listed in the above tables shall be provided by the contractor. All containers shall have secondary containment.			

TABLE 2-2
List of Commercial Chemicals to be Used or Stored On-Site during Construction

Type	Quantity	Containment Method	Location
Notes: A SDS for all hazardous substances listed in the above tables shall be provided by the contractor. All containers shall have secondary containment.			

TABLE 2-3
List of Hazardous and Nonhazardous Wastes to be Used or Stored On-Site during Construction

Type	Quantity	Containment Method	Location
Notes: A SDS for all hazardous substances listed in the above tables shall be provided by the contractor. All containers shall have secondary containment.			

TABLE 2-4
List of Incompatible Materials to be Used or Stored On-Site during Construction

Type	Quantity	Containment Method	Location
Notes: A SDS for all hazardous substances listed in the above tables shall be provided by the contractor. All containers shall have secondary containment.			

Incompatible materials shall be stored in separate areas in accordance with nationally recognized standards. Incompatible materials shall not be consecutively placed into a container or tank. Additionally, sources of ignition are prohibited in hazardous materials and wastes areas.

The Contractor shall identify and list all sources of potential large spills, including tank overflow, rupture, or leakage. SPCC information must be included for all containers greater than 55 gallons with a cumulative capacity of 1,320 gallons or greater that contain oil, including petroleum, fuel oil, sludge, oil refuse, and oil mixed with waste, as required in Code of Federal Regulations, Title 40, Part 112 (40 CFR Part 112). The Contractor shall list large spill sources in **Table 2-5A**. Additional sources of large spills can be listed in **Table 2-5B**. Additional tables shall be provided as needed.

TABLE 2-5A
List of Large Spill Sources

Product	Total Quantity Storage Size, Type		Potential Direction of Flow	Maximum Rate of Flow	Structures or Equipment to Contain Spills	Location of Use
	Present	Location				
Note: All containers shall have secondary containment.						

TABLE 2-5B
List of Large Spill Sources

Product	Total Quantity Storage Size, Type		Potential Direction of Flow	Maximum Rate of Flow	Structures or Equipment to Contain Spills	Location of Use
	Present	Location				
Note: All containers shall have secondary containment.						

2.2 Hazardous Materials and Waste Inspections

The Contractor shall inspect weekly hazardous materials and waste and associated storage areas. These weekly inspections shall document the condition of the hazardous materials and waste and the associated storage containers. The Contractor shall file all inspection records with the Chief Inspector and Environmental Inspector on a weekly basis. The weekly inspection form is at the end of this section and is titled *Weekly Hazardous Materials and Waste Inspection Log*.

Weekly Hazardous Materials and Waste Inspection Log

For each item listed below, the Contractor shall indicate whether existing conditions are acceptable (A) or unacceptable (U). Resolution of all unacceptable conditions must be documented. Contractor shall inspect all storage facilities on a regular basis, but not less than weekly. Contractor shall file all inspection records with the Chief Inspector and Environmental Inspector on a weekly basis.

I. STORAGE AREAS FOR FUELS, LUBRICANTS, AND CHEMICALS

General

A/U

- ☐ Construction yard or storage areas secured
- ☐ National Fire Protection Association symbol posted in storage area or at yard entrance
- ☐ Storage areas properly prepared and signed
- ☐ Safety Data Sheets available
- ☐ Hazardous Materials Management Plan and Spill Prevention and Countermeasure Plan available

Hazardous Materials Management

A/U

- ☐ No evidence of spill or leaking materials
- ☐ Incompatible materials separated
- ☐ All containers labeled properly
- ☐ All containers securely closed
- ☐ All containers upright
- ☐ No evidence of container bulging, damage, rust, or corrosion

Secondary Containment Areas

A/U

- ☐ Containment berm intact and capable of holding 110 percent of material stored plus precipitation
- ☐ Lining intact
- ☐ No materials overhanging berms
- ☐ No materials stored on berms
- ☐ No flammable materials used for berms

Compressed Gases

A/U

- ☐ Cylinders labeled with contents
- ☐ Cylinders secured from falling
- ☐ Oxygen stored at least 25 feet away from fuel
- ☐ Cylinders in bulk storage are separated from incompatible materials by fire barriers or by appropriate distance

II. HAZARDOUS WASTE MANAGEMENT

Waste Container Storage

A/U

- ☐ No evidence of spilled or leaking wastes
- ☐ Adequate secondary containment for all wastes
- ☐ Separate containers for each waste watercourse (no piles)
- ☐ Waste area not adjacent to combustibles or compressed gases
- ☐ All containers securely closed
- ☐ Bungs secured tightly
- ☐ Open-top drum hoops secured
- ☐ All containers upright
- ☐ No evidence of container bulging or corrosion
- ☐ No severe damage or rust
- ☐ Containers are compatible with waste (e.g., plastic liner for corrosives, metal liner for solvents)
- ☐ No smoking and general danger and/or warning signs posted

Waste Container Labeling

A/U

- ☐ Containers properly labeled

Name, address, and U.S. Environmental Protection Agency identification (ID) number or ID number of generator listed (Not required if Contractor is an exempt small quantity generator)

- ☐ Accumulation start date listed
- ☐ Storage start date listed
- ☐ Chemical and physical composition of waste listed
- ☐ Hazardous property listed

Nonhazardous Waste Areas

A/U

- ☐ No litter in yard
- ☐ No hazardous wastes or used oil mixed with trash (e.g., contaminated soil, oily rags, diapers, or other oily materials)
- ☐ Empty oil and aerosol containers for disposal are completely emptied

III. EMERGENCY RESPONSE EQUIPMENT

A/U

- ☐ Shovels
- ☐ Absorbent materials (e.g., booms, pads, pillows, socks, "Speedy Dry")
- ☐ Personal protective equipment (e.g., goggles, gloves)
- ☐ Fire-fighting equipment
- ☐ First aid supplies (e.g., medical supplies, squeeze bottle eye wash)
- ☐ Department-of-Transportation-approved containers
- ☐ Plastic sheeting, bags, and ties
- ☐ Communication equipment
- ☐ Bung wrench (non-sparking)

IV. CORRECTIVE ACTIONS TAKEN (Required for all unacceptable conditions)

Enter information here

Date: Contractor Name:

Inspected by (Contractor's Inspector):

Signature:

3.0 SPILL PLAN

This section of the SPCC Plan describes spill preparedness, prevention, and containment. Spill preparedness and prevention training is also discussed in this section.

3.1 Spill and Leak Preparedness and Prevention

3.1.1 Employee Training

Prior to construction, contractors and MVP personnel shall be trained in hazardous waste management procedures that will enable them to respond effectively to emergencies by familiarizing them with emergency procedures, equipment, and communication systems. Personnel who handle, sample, or come in direct contact with oils or hazardous matter shall undergo basic training that stresses the importance of pollution control. Spill prevention control procedures shall be thoroughly explained during the training briefings, which will be conducted by the Contractor Superintendent, the MVP Chief Inspector, and the MVP Environmental Inspector or their designated representative on the job site. The MVP EC shall maintain training verification.

Prior to construction, all Project Chief and Environmental Inspectors shall receive a copy of this SPCC Plan and an approved list of emergency response contractors. Inspectors shall be trained on equipment maintenance, fuel and hazardous material handling, spill prevention procedures, and spill response.

All personnel involved in constructing the proposed facilities shall be aware of the SPCC and the Preparedness, Prevention, and Contingency Plan. Regular training briefings shall be conducted on an as-required basis by the Contractor Superintendent and the MVP Chief Inspector on the job site. These briefings shall include the following:

- Precautionary measures to prevent spills
- Potential sources of spills, including equipment failure and malfunction
- Standard operating procedures (SOPs) in the event of a spill
- Applicable notification requirements
- Equipment, materials, and supplies available for spill clean-up

3.1.2 Security

Hazardous wastes and waste containing polychlorinated biphenyls (PCBs) greater than 50 parts per million (ppm) shall be stored in a secured location (i.e., fenced, locked). Fuel storage areas shall be located to minimize, as much as possible, tampering by unauthorized personnel during nonoperational hours.

3.1.3 Prevention and Preparedness

A discharge from the construction site into waters of the state is unlikely to occur. The construction site shall have on-site spill prevention and control facilities and routinely inspect tank and container storage areas (inspection form: Weekly Hazardous Materials/Waste Inspection Log included Section 2), which will mitigate the potential for oil and hazardous material to be released to soil or surface waters. In areas where hazardous materials are required to be stored or used within a wetland, the Contractor

shall prepare and submit for approval a secondary containment plan before working in the wetland area.

Spill or overfill of petroleum that results in a release to the environment that exceeds 25 gallons or that causes a sheen on nearby surface water must be reported immediately. Generally, minor spills or leaks shall be contained within secondary containment areas. In Virginia, spills or overfills must be reported to the DEQ State Water Control Board within 24 hours in the following cases (Virginia Water Control Law, Article 11, 62.1-44.34:19):

- Spill or overfill of a hazardous substance that results in a release to the environment that equals or exceeds its reportable quantity under the Comprehensive Environmental Response, Compensation, and Liability Act of 1980 (40 CFR Part 302).
- Oil spills less than 25 gallons to lands that cannot be cleaned up within 24 hours

TABLE 3-1
Areas Where Potential Spills and Leaks Might Occur

Location\Use or Equipment	Quantity/Reportable Quantity	Containment Method	Product
	/		
	/		
	/		
	/		
Note: All containers shall have secondary containment.			

3.1.4 Tanks

The Contractor shall take the following precautions to prevent a spill from occurring within tank storage areas:

- Only those tanks for fuel and material storage that meet MVP's approval shall be operated.
- Single-wall tanks shall be provided with temporary secondary containment that will hold at least 110 percent of the tank capacity of the largest tank inside the containment area.
- Precipitation shall be inspected first for evidence of oil, including a sheen, or other contaminants. If a sheen or other indicators of oil or contamination is present, then the material shall be collected for proper disposal off site. Any precipitation shall be removed from the containment area to maintain the available containment volume at 110 percent of the volume of material stored.
- Only self-supporting tanks constructed of carbon steel or other materials compatible with the contents of each tank shall be used.
- PCB (50 ppm or greater) storage tanks shall be double-walled or have secondary containment that will hold 200 percent of the tank capacity.
- Elevated tanks shall be a maximum of two feet above grade.
- Tank storage shall be located in areas that are at least 100 feet from all waterbodies, wetlands, and designated municipal watershed areas.
- All tanks shall be inspected daily for leaks and deterioration by the Contractor EC or designee. The results of all inspections shall be recorded on the Weekly Hazardous Materials and Waste

Inspection Log (included at the end of Section 2). Copies of the log for unsatisfactory storage area inspections shall be distributed to MVP's EC and the Project Manager. Leaking and/or deteriorated tanks shall be repaired or replaced as soon as the condition is first detected.

- Tanks and secondary containment drains shall remain closed when not in use.
- Vehicle-mounted tanks shall be equipped with flame and/or spark arrestors on all vents to prevent self-ignition.
- Incompatible materials shall not be stored in sequence in tanks prior to decontamination. A list of incompatible materials is listed in Section 2, Waste Management, Table 2-4.
- Tanks used to store hazardous materials shall be decontaminated before they are used at a different construction location if they could contaminate the next material to be placed in the tank. The tanks shall be decontaminated if they are to be returned to a vendor. The tanks shall also be decontaminated if they are being returned to an MVP yard and no immediate specific same service use is scheduled.
- If a tank contains hazardous material, then the MVP EC shall be contacted, and transportation shall follow the steps outlined in MVP's Environmental SOP regarding Waste Transportation.

TABLE 3-2
Tank and Container Storage Exception Areas

Material	Quantity	Containment Method	Location
Note: Exception areas must be approved by the EC.			

3.1.5 Containers

The Contractor shall take the following precautions to prevent a spill from occurring within container storage areas:

- For drum storage, reference MVP's Environmental SOPs; MVP EC shall a copy of the current Environmental SOPs.
- Containers shall remain closed when not in use.
- All containers shall have temporary containment. A list of temporary containment is listed in Section 2, Waste Management, Tables 2-1 through 2-4.
- Small cans of gasoline, diesel, solvents, and other hazardous materials shall be stored within the temporary containment or within secured trailers or vehicles when not in use.
- Incompatible materials shall not be in sequence in containers before decontamination. A list of incompatible materials is included in Section 2, Waste Management, Table 2-4.
- Containers used to store hazardous materials shall be decontaminated before they are used at a different construction location if they could contaminate the next material to be placed in the

container. The containers shall always be decontaminated if they are being returned a MVP yard and no immediate specific same service use is scheduled.

- If a container contains a hazardous material, then transportation shall follow the steps outlined in MVP's Environmental SOPs regarding Waste Transportation.
- No incompatible material shall be stored together in the same containment area.
- Leaking and/or deteriorated containers shall be replaced as soon as the condition is first detected.
- Containers shall be stored in areas that are at least 100 feet from all waterbodies, wetlands, and designated municipal watershed areas, with certain exceptions as approved by the Contractor EC as listed in Table 3-2.
- All container storage and containment areas shall be used to store waste or products according to the guidelines described in MVP's Environmental SOPs regarding Facility Inspections.

3.1.6 Loading and Unloading Areas

The Contractor shall take the precautions listed below to prevent a spill from occurring within loading and unloading areas when those areas are located at the construction site; MVP personnel shall be present during loading and unloading activities:

- Liquids shall be transferred and refueling shall only occur in predesignated and preapproved locations that are at least 100 feet from all waterbodies and wetlands. Exceptions might be approved by the Environmental Inspector if no reasonable alternatives are available and secondary containment is used. Certain exceptions are listed in Table 3-2.
- All loading and unloading areas shall be closely monitored to prevent any leaks and spills.
- The area beneath loading and unloading locations shall be inspected for spills before and after each use.
- All hose connections shall use drip pans at the hose connections while loading and unloading liquids. If a leak or spill occurs, then the loading and unloading operation shall be stopped and the spill shall be contained, cleaned up, and collected before operations continue.
- All tank truck outlets shall be inspected before trucks leave the loading and unloading area to prevent possible leakage from the truck while in transit.
- Each refueling vehicle shall have a sufficient number of shovels, brooms, 10-millimeter polyethylene sheeting, and fire protection equipment to contain a moderate oil and/or fuel spill.
- Any service vehicle used to transport lubricants and fuel shall be equipped with an emergency response kit, and this kit, at a minimum, must include the following:
    - 25 pounds of granular oil absorbent
    - Ten 48-inch x 3-inch oil socks
    - Five 17-inch x 17-inch oil pillows
    - One 10-inch x 4-inch oil boom
    - Twenty 24-inch x 24-inch x 3/8-inch oil mats
    - Garden-size, 6-millimeter polyethylene bags
    - Ten) pair of latex gloves
    - One 55-gallon polyethylene open-head drum

In addition, a smaller chemical response kit shall be available that contains the following:

- One bag of loose chemical pulp
- Two to three (2 to 3) 17-inch x 17-inch chemical pillows
- Two 48-inch x 3-inch chemical socks
- Five 18-inch x 18-inch x 3/8-inch absorbent mats
- Garden-size, 6-millimeter, polyethylene bags
- Ten pair of latex gloves
- One 30-gallon polyethylene open-head drum
- Hazardous waste labels

3.1.7 Concrete Coating Areas for Field Joints

Concrete coating of field joints shall be performed **at least 100 feet from the edge of all waterbodies**. Where topographic conditions and/or work space limitations necessitate applying concrete coating within 100 feet of a watercourse, sufficient containment measures shall be implemented to eliminate the spill of any concrete coating materials into a wetland or watercourse. Containment such as the following (or equivalent as approved by the MVP EC in a secondary containment plan to be submitted by the Contractor) shall be used:

- Concrete coating materials shall be temporarily stored in an earthen berm with a polyethylene lining of 10-millimeter thickness or in a portable containment tray constructed of steel plate measuring a minimum of 4-feet-square by 1–foot-deep.
- Portable-mechanical mixing equipment, if required, shall be operated within a containment area constructed of temporary earthen berms and polyethylene lining a minimum of 10-millimeter thickness.
- Concrete materials in a portable container (such as a 55-gallon drum cut in half or equivalent) shall be mixed within an earthen berm with polyethylene lining of 10- millimeter thickness or within a portable containment tray constructed of steel plate, measuring a minimum of 4-feet-square by 1-foot-deep.

3.1.8 Equipment Inspections

All construction equipment in use on the pipeline right-of-way (ROW) shall be inspected daily. Any leaks shall be repaired immediately or the piece of equipment shall be removed from service, removed from the ROW, and repaired prior to returning to service. All inspections shall be documented on a daily leak report submitted to MVP.

3.1.9 Emergency Equipment

The construction site and/or contractor yard shall have adequate manpower and equipment necessary to divert any spilled material from waterbodies and wetland areas. Emergency equipment shall include, but is not limited to, shovels, backhoes, dozers, front-end loaders, oil-absorbent booms, pillows, socks and/or mats, granular oil absorbent, and chemical absorbent pulp. A list of emergency response equipment and personal protective equipment (PPE) is provided in Section 4.3.

3.1.10 Contractor's Site Map

The Contractor shall prepare a site map before construction begins. At a minimum, the Contractor's site map shall include the following:

- Orientation and scale
- Total land area in square feet
- Access and egress points
- Buildings and/or temporary trailers
- Parking lots
- Adjacent land uses (if business, indicate business name)
- Surrounding roads, storm drains, and waterways (e.g., waterbodies and wetlands)
- Locations of hazardous materials and waste storage
- Underground and aboveground tanks
- Containment or diversion structures (e.g., dikes, berms, retention ponds)
- Shutoff valves and/or circuit breakers
- Location of emergency response materials and equipment
- Location of MSDS and SPCC Plan
- Location of emergency assembly area

3.2 Housekeeping Program

The construction area shall be maintained in a neat and orderly manner. Solid wastes, such as food wrappings, cigarette butts and packets, Styrofoam cups and plates, and similar wastes, shall be disposed of offsite and not in any construction excavation area. Any spills or leaks shall be cleaned up as expeditiously as possible. Trash shall be routinely collected for offsite disposal. Container storage areas shall be maintained in a neat and orderly manner.

4.0 KARST AREA EROSION AND SEDIMENTATION CONTROL

The following discussion outlines erosion and sediment control (ESC) measures to support MVP construction in karst terrain. Karst terrain underlies portions of the proposed MVP route from West Virginia/Virginia State line into Roanoke County, Virginia. Karst terrain is a landscape formed from the dissolution of soluble rocks. It is characterized by underground drainage systems with sinkholes, dolines, and caves.

MVP completed a Karst Hazards Assessment that identifies karst features in the vicinity of the Project. MVP also completed a Karst Mitigation Plan that serves as a guidance document for protecting and mitigating karst features during MVP construction. Karst-specific ESC measures are a critical component for protecting karst features and local water bodies during construction and after land reclamation for post-pipeline installation.

4.1 Regulatory Oversight

Virginia codified a law for protecting caves (the Virginia Cave Protection Act, Code of Virginia Section 10.1-1000 to 1008); there is no corresponding law that specifically protects karst.

The Virginia Department of Conservation and Recreation, a division of the Department of Environmental Quality, includes a Karst Protection Coordinator branch. Coordination with the Karst Protection Coordinator is described in more detail in this plan.

4.2 Objectives

The primary objectives for karst-specific ESC are to prevent erosion, overland flow, and sediment transport to water bodies and karst features during pipeline construction, and to prevent erosion, sedimentation, and flooding problems in karst areas after pipeline construction and land reclamation. The primary means to reduce risks for erosion, sedimentation, and flooding in karst terrain is to restore land surface grades to pre-construction characteristics and not significantly change the volume of surface water that enters a karst feature. This can be accomplished by preventing direct impact to karst features and water bodies during construction, and minimizing to the extent practical land surface alterations after pipeline installation and land reclamation. Enhanced Best Management Practices (BMPs) and construction planning in karst terrain are presented herein to accomplish these objectives.

4.3 Considerations for Surface Water Management and Erosion & Sediment

Unlike typical construction and development activities, the Project will not result in large swaths of impervious land, or large swaths of altered grade. The Project is primarily a relatively narrow linear subsurface construction project that will be regraded to pre-construction characteristics, and revegetated.

To minimize the potential for impacts to a karst feature (e.g., sinkhole, cave opening, etc.,) or a water resource (e.g., well, spring, stream, pond) from pipeline construction in karst areas, industry-standard ESC practices will be supplemented with enhanced BMPs, and implemented by MVP and its contractors, to accomplish the following objectives:

- Minimize the volume of stormwater and other construction-related surface water run-off;
- Minimize the permanent alteration of land surface characteristics and surface runoff patterns (existing drainage patterns and features should be taken into consideration to minimize changes to the rate that water enters the subsurface through a karst feature);
- Promote broad and shallow surface water flow dispersion with suitable spreading or diversion techniques;
- Prevent uncontrolled release of surface water and sediment to a water body or karst feature;
- Prevent artificial routing of storm water to karst features;
- Prevent blockage or filling of karst features;

- Do not construct artificial storm water structures within karst features;
- Prevent disposal of materials into a karst feature that will degrade the quality of water entering the subsurface through karst feature;
- Install double lines of sediment control fencing and straw bales upslope of a water body or karst feature;
- Stock pile excavated material at least 100 feet from a water body so that the material cannot slough back into these areas;
- Monitor ESC and stormwater management structures periodically during construction, and particularly after precipitation events (stormwater and ESC structures include sediment control fencing, straw bales, temporary detention basins, diversion berms, or containerization - clean, repair, and replace structures as necessary);
- Do not discharge hydrostatic test water in karst areas;
- Establish staging areas for the crew, equipment, hazardous materials, chemicals, fuels, lubricating oils, etc., at least 100 feet from a water body or karst feature;
- Install ESC and stormwater management structures surrounding staging areas to prevent run-on to, and then run-off and sediment migration from these sites;
- Store construction waste materials, debris, and excess materials at least 100 feet from a water body or karst features;
- Refuel and maintain construction equipment at least 100 feet from a water body or karst feature;
- Limit the removal of riparian vegetation to only when it is necessary;
- Re-vegetate all disturbed areas as soon as possible after construction using only native plants to reduce soil erosion. Annual species, such as rye or wheat, may initially be planted along with native species in areas subject to immediate soil loss, such as a steep slope, to provide rapid erosion control. Final re-vegetation should use native species only;
- Replace woody riparian vegetation unavoidably lost using native riparian plants to help prevent the spread of invasive plants;
- Where possible and practical, leave a minimum of 100-foot wide natural vegetated buffer area around a water body or karst feature. Plant a vegetative buffer of at least 100 feet around a water body or karst feature if the vegetation was previously cleared;
- Apply fertilizers, herbicides, pesticides, or other chemicals no closer than 100 feet of a water body or karst feature;

- Evaluate the establishment of vegetation after project completion and inspect all sediment control structures at one month intervals for at least 3 months. Retain sediment control structures until site stabilization is achieved;

- Remove and dispose of all debris and excess construction materials properly upon project completion;

- Remove temporary sediment/erosion control structures upon final site stabilization;

- Clay dams or breakers should be included in pipeline installation design and constructed at appropriate intervals along the trench excavation to impede subsurface flow along the trench.

5.0 CONTINGENCY PLAN AND EMERGENCY PROCEDURES

Emergency response procedures have been developed for the project to guide responses to fires, explosions, releases of oils or hazardous waste to the air, land, or waters of the state regardless of the quantity involved in the incident. For unanticipated release of hydrostatic test waters, MVP shall utilize best management practices (BMPs), as described in the Erosion and Sediment Control Plan (E&SCP) as soon as possible after the release.

5.1 Responsibilities of MVP and Contractor Personnel

If notification is given that an evacuation is necessary, all personnel shall evacuate the construction area via the primary evacuation route (site-specific map with evacuation route to be attached for plant projects) and await further instructions from the EC. If direct access to the primary evacuation route is restricted by fire, spill, smoke, or vapor, facility personnel shall evacuate the facility via alternate evacuation routes to the nearest accessible open area.

5.2 <u>First Responder</u>

Any individual who first observes a spill or any other imminent or actual emergency situation shall take the following steps:

1. Assess the situation to determine if the situation poses an immediate threat to human health or the environment.
2. Identify hazardous substances involved, if any.
3. Report the emergency or spill to the MVP and Contractor EC(s) immediately.
4. Standby at a safe distance and keep others away.
5. Activate emergency shutdown, if necessary.

The Contractor Superintendent shall act as the Emergency Coordinator for the Contractor. The Chief Inspector shall act as the Emergency Coordinator for MVP. The responsibilities of the Emergency Coordinator are presented in the remainder of this section.

5.2.1 Contractor EC Responsibilities

The Contractor EC shall coordinate the response to all spills that occur as a result of Contractor operations. The Contractor shall not coordinate the response of spills of pipeline liquids, hazardous wastes, or the unanticipated release of hydrostatic test waters; these spills shall be coordinated by the MVP EC.

Following are specific Contractor EC responsibilities:

1. Determine any immediate threat to human health, the environment, and the neighboring community.
2. Ensure personnel safety and evacuate, if necessary.
3. Identify source, character, amount, and extent of release.
4. Determine if hazardous substances are involved.
5. Inform the MVP EC and follow instructions.
6. Direct and document remediation efforts to contain and control spill release.
7. Document remedial efforts.
8. Coordinate cleaning and disposal activities.

5.2.2 MVP EC Responsibilities

The MVP Emergency Coordinator shall coordinate clean-up of all spills of pipeline liquids, hazardous wastes, and any unanticipated release of hydrostatic test water.

Upon notification of pipeline liquid spills, hazardous materials spills, or the unanticipated release of hydrostatic test waters, the MVP EC shall be responsible for the following:

1. Assess situation for potential threat to human health, environment, and the neighboring community
2. Implement evacuation, if necessary
3. Ensure personnel safety
4. Control source as conditions warrant
5. Immediately notify supervisory personnel immediately for spills that meet one or more of the following criteria:
    a. One pound or more of a solid material (excluding horizontal directional drilling mud spilled on land)
    b. Five gallons or more of a liquid spilled on land
    c. Any substance that creates a sheen on water
    d. Air pollution incidents where there might be a release of a toxic substance
    e. Unanticipated release of hydrostatic test water
6. If necessary, notify the local fire department, law enforcement authority, or health authority as appropriate, and provide the following information:
    a. Name of the caller and call-back number

   b. The exact location and nature of the incident
   c. The extent of personnel injuries and damage
   d. The extent of release
   e. The material involved and appropriate safety information
7. Ensure that any waste or product that might be incompatible with a released material is kept away from the affected area.
8. Keep any potential ignition source away from emergency area, if spilled material is flammable.
9. Minimize affected area with appropriate containment or diking.
10. Assemble required spill response equipment as required (e.g., protective clothing, gear, heavy equipment, pumps, absorbent material, and empty drums).
11. Place spilled material in appropriate containers, in accordance with the MVP Environmental SOPs.
12. Label and store containers in accordance with the MVP Environmental SOPs.
13. Coordinate waste disposal and equipment decontamination.
14. Terminate response.
15. Ensure that all emergency response equipment is fully functional. Any equipment that cannot be reused shall be replaced.
16. For PCB spills, follow special spill response requirements related to PCB spills.
17. Assist with the coordination of clean-up and disposal activities as described in Sections 4.4, 4.5, and 4.6.
18. If necessary, contact outside remediation services to assist with clean-up.
19. Complete Waste Removal Storage and Disposal Record Form to track waste generated during this project.
20. Complete Field Spill Report (included at the end of this section) and distribute accordingly.
21. For unanticipated release of hydrostatic test waters, notify state contact if required by state permit in accordance with timeframes required by state permit.
22. As required by permit, arrange for immediate sampling of the test water (from the pipe or a representative sample of released water where possible) or soil where the test water was released and water from adjacent watercourse if test water was released into the watercourse. Samples shall be analyzed in accordance with hydrostatic test discharge permit criteria.
23. Ensure that an MVP representative notifies the municipal manager and/or mayor, as required.

5.3 Emergency Equipment

The construction site and r Contractor yards shall have adequate personnel and equipment necessary to divert any spill from waterbodies and wetland areas. Emergency equipment shall include, but is not limited to, shovels, backhoes, dozers, front-end loaders, oil absorbent booms, pillows, socks and/or mats, granular oil absorbent, and chemical absorbent pulp. Table 5-1 lists emergency response equipment and PPE (to be completed by Contractor).

TABLE 5-1
Spill Response Equipment

Equipment	Quantity	Location

TABLE 5-2
Fire Response Equipment

Equipment	Quantity	Location

TABLE 5-3
Personal Protective Equipment

Equipment	Quantity	Location

5.4 Spill Clean-Up/Waste Disposal Procedures

The following identifies the clean-up and control measures to be used in the event of a spill of oil, fuel, or hazardous substance or unanticipated release of hydrostatic test water.

5.4.1 Oil and/or Fuel Spills

- Ensure no immediate threat to surrounding landowners or environment.
- Remediate small spills and leaks as soon as feasible. Use absorbent pads whenever possible to reduce the amount of contaminated articles.
- Restrict the spill by stopping or diverting flow to the oil and/or fuel tank.
- If the release exceeds the containment system capacity, immediately construct additional containment using sandbags or fill material. Every effort must be made to prevent the seepage of oil into soils and waterways.

- If a release occurs into a facility drain or nearby watercourse, immediately pump any floating layer into drums. For high-velocity watercourses, place oils booms or hay bales between the release area and the site boundary and downstream of affected area. As soon as possible, excavate contaminated soils and sediments.
- After all recoverable oil has been collected and drummed, place contaminated soils and articles in containers.
- For larger quantities of soils, construct temporary waste piles using plastic liners and place the contaminated soils on top of the plastic and covered by plastic. Plastic-lined, roll-off bins should be leased for storing this material as soon as feasible.
- Label the drum following the procedures outlined in the MVP's Environmental SOPs.
- Move drum to secure staging or storage area.
- Document and report clean-up activities of the MVP EC as soon as feasible.
- If environmentally sensitive resources (e.g., wetlands, waterbodies) exist in the area, ensure that BMPs as described in the ESCP are used to minimize impact to these resources.

5.4.2 Hazardous Substance Releases

- Ensure no immediate threat to surrounding landowners or environment.
- Identify the material and quantity released.
- Block off drains and containment areas to limit the extent of the spill. Never wash down a spill with water.
- Ensure that PPE and containers are compatible with the substance.
- Collect and reclaim as much of the spill as possible using a hand pump or similar device. Containerize contaminated soils in an appropriate Department-of-Transportation approved container in accordance with the MVP's Environmental SOPs. (Note: Environmental SOP's are located in all division and area offices and kept by all engineering teams.) Never place incompatible materials in the materials in the same drum.
- Sample the substances for analysis and waste profiling.
- Decontaminate all equipment in a contained area and collect fluids in drums.
- Label the drum.
- Move the drum to secure staging or storage area.
- Document and report activities to the MVP EC as soon as feasible.
- If environmentally sensitive resources (wetlands, waterbodies) exist in the area, then ensure that BMPs as described in the ESCP are used to minimize impacts to these resources.

5.4.3 Unanticipated Release of Hydrostatic Test Water

- Ensure no immediate threat to surrounding landowners or environment.
- If environmentally sensitive resources (wetlands, waterbodies) exist in the area, then ensure that BMPs as described in the ESCP are used to minimize impacts to these resources.

5.5 Disposal of Contaminated Materials and/or Soils

- The Contractor shall work with the MVP EC to characterize waste generated during this project. All wastes generated as a result of spill response activities shall be analyzed to determine if hazardous or if PCBs are greater than 1 ppm. Knowledge of the contaminant(s) might be applied to classify the waste and spill materials as determined by the MVP EC.
- The Contractor is responsible for properly disposing of wastes generated during this project that is determined by the MVP EC to be nonhazardous and to contain PCBs less than 1 ppm; this includes obtaining applicable authorizations and registrations for waste disposal.
- The MVP EC is responsible for properly disposing of hazardous and PCB-containing wastes containing greater than 1 ppm generated during this project, including obtaining applicable U.S. Environmental Protection Agency ID numbers.
- Hazardous and PCB-containing waste shall be stored in a secured location (i.e. fenced, locked) until the material is transported off site. At no time shall hazardous waste be stored for more than 90 days or a waste containing PCBs with more than 50 ppm be stored for more than 30 days.

5.6 Equipment Cleaning/Storage

- Upon completion of remedial activities, the Contractor shall decontaminate emergency response equipment used to remediate a spill resulting from its operations. MVP shall be responsible if the spill is hazardous material.
- The Contractor shall be responsible for disposing of any contaminated waste or non-PCB containing waste generated as a result of the decontamination process.
- MVP shall be responsible for disposing of any contaminated Hazardous Waste or PCB Containing Material generated as a result of the decontamination process.
- The Contractor shall replace all spent emergency response equipment prior to resuming construction activities if spill resulted from their operations.
- The Contractor shall test and inventory reusable PPE prior to being placed back into service.

6.1 REGULATORY COMPLIANCE

This section provides the reader with a high-level overview of the regulatory requirements addressed in this SPCC Plan. This section is arranged by activity, in typical order or occurrence by job, with the corresponding regulation.

Regulatory Compliance by Activity			
Activity Type	**Federal Regulation Citation**	**State Regulation Citation**	**SPCC Plan Section**
General Applicability			
Is facility under purview of regulations?	40 CFR Part 112	9 VAC 25-91	
Does facility comply with applicable regulations?	40 CFR Part 112	9 VAC 25-91	
Materials Storage and Handling			
Material and Waste Inventory	40 CFR Part 112	9 VAC 25-91[1]	Spill Plan (Section 3)Waste Management (Section 2)
Material Transport and Disposal	40 CFR Part 112	9 VAC 25-91[1]	Contingency Plan (Section 5)
Spill Prevention and Containment			
Emergency Response Contacts	40 CFR Part 112	9 VAC 25-91[1]	Spill Plan (Section 3)
Training	40 CFR Part 112	9 VAC 25-91[1]	
Security	40 CFR Part 112	9 VAC 25-91[1]	
Prevention and Preparedness	40 CFR Part 112	9 VAC 25-91[1]	
Facility Information	40 CFR Part 112	9 VAC 25-91[1]	
Facility Drainage and Routes of Flow	40 CFR Part 112	9 VAC 25-91[1]	
Inspections and Reporting			
Emergency Response Contacts	40 CFR Part 112	9 VAC 25-91[1]	Spill Plan (Section 3) Contingency Plan (Section 5)
Inspections, Tests, and Records	40 CFR Part 112	9 VAC 25-91[1]	
Discharge Reporting	40 CFR Part 112	9 VAC 25-91[1]	

Regulatory Compliance by Activity			
Activity Type	**Federal Regulation Citation**	**State Regulation Citation**	**Plan Section**
Spills and Response			
Emergency Procedures and Response	40 CFR Part 112	9 VAC 25-91[1]	Spill Plan (Section 3) Contingency Plan (Section 5)
Discharge Notification	40 CFR Part 112	9 VAC 25-91	
Clean-up	40 CFR Part 112	9 VAC 25-91[1]	
Wastewater Discharge			
Facility Drainage	40 CFR Part 112	9 VAC 25-91[1]	Spill Plan (Section 3)

[1] if an oil discharge contingency plan is required

Appendix A
Unanticipated Discovery of Contamination Plan

Unanticipated Discovery of Contamination Plan Introduction

The purpose of this Unanticipated Discovery of Contamination Plan (Plan) is to provide work, investigation, and reporting procedures for responding to the unanticipated discovery of contamination in soil, groundwater, or sediment during excavation, construction, or maintenance activities associated with construction of the MVP Pipeline Project.

Consistent with this purpose, the objectives of this Plan are to protect the health and safety of project personnel and the environment and to prevent the spread of contamination during and after an unanticipated discovery of contamination.

The greatest potential for the discovery of unanticipated contamination will occur during the excavation of the pipeline trench and horizontal boring procedures. The following response plan will be executed if any Project personnel detects potential contamination such as:

- Odor;
- Visible staining on soil;
- Sheen on ground or purge water;
- Unidentified underground service tank; or
- Potential cultural resources, including human remains.

Unanticipated Discovery Response Plan

Stage 1 – Suspend Work Activities
All construction and/or maintenance work in the immediate area of the discovery shall stop. Personnel shall move to upwind areas as necessary.

Stage 2 – Identify Immediate Threats
If an immediate threat is detected, emergency response (i.e., 911) shall be notified. The area shall be evacuated.

Stage 3 – Identify and Secure Area
If safe to do so, the area immediately around the potential contamination shall be secured with safety fencing or flagging. Site personnel shall remain on site to restrict access as appropriate.

Stage 4 – Conduct Notifications
Appropriate MVP environmental professionals and officials shall be notified of the potential contamination. It shall be the decision of the MVP environmental professional (TBD) to determine environmental agency or public official notification requirements. Primary points of contact are:

MVP: Megan Neylon, Environmental Permitting Supervisor, 724-873-3645
Virginia DEQ:VA Department of Emergency Management Watch Center, 800-468-8892USFS : Jefferson National Forest Supervisor, 540-265-5118

Stage 5 – Discovery Documentation Protocol

An appropriate MVP employee or designee will document the unanticipated contamination utilizing the attached Worksheet 1. Worksheet 1 includes instructions for the appropriate MVP employee or designee to record the site name, locations, and how suspected contamination was determined. The MVP employee or designee will coordinate with the construction contractor(s) who identified the contamination to assist in completing Worksheet 1.

Stage 6 – Remedial Action Planning

An onsite meeting (if appropriate) will be conducted among site personnel, MVP environmental professionals, and any appropriate contamination response contractors to determine remediation requirements and methodologies. If remediation activity is appropriate, an environmental consultant (if appropriate) should be contacted to assist with the remedial activity. Remedial activities should be conducted according to the following general sequence of events. This is a general plan and is not meant to apply to all contamination situations. A more robust, site-specific remedial action plan should be completed by an environmental consultant prior to completing remedial activities.

Step 1: Sampling – Representative samples should be collected and submitted to an environmental laboratory for analysis and/or waste classification. Results of this analysis may dictate notification requirements. An environmental consultant can assist in the determination of these requirements.

Step 2: Remedial Action Determination – Following laboratory analysis, the MVP environmental professional and/or the environmental consultant will evaluate the analysis results and, if appropriate, identify the type of remediation (in-situ, removal, etc.) to be completed.

Step 3: Remedial Action – MVP will mobilize an appropriate contractor, and remediation activities will be conducted. Any soil and/or groundwater suspected of containing contamination will be segregated from clean soil and/or water using plastic sheets, fractionation tanks, or other appropriate methodologies. Containers will be clearly labeled. Known hazardous wastes will be labeled and separated with orange construction fencing.

Step 4: Disposal – Wastes will be disposed of properly at a permitted facility. MVP environmental professional or its environmental consultant will determine disposal requirements.

Stage 7 – Record Keeping

A record of the sequence of events from the beginning (unanticipated discovery) to the end (disposal) of the incident will be recorded and kept on file with the MVP environmental professional in accordance with all mandated record keeping requirements.

Worksheet 1 – Unanticipated Discovery of Contamination Documentation Worksheet

Instructions: Complete this worksheet to document an unanticipated discovery of contamination event. Use a separate sheet (copy) for each occurrence.

A. Site Name, Physical Location, and Milepost

_____

_____

_____

_____

B. How Suspected Contamination was Determined (odor, stain, sheen, etc.). Include photographs as appropriate.

_____

_____

_____

_____

C. List dates, times, and officials notified

_____

_____

_____

_____

Environmental Response Contact Sheet

Primary points of contact are:

MVP:	Megan Neylon, Environmental Permitting Supervisor, 724-873-3645
Virginia DEQ:	Virginia Department of Emergency Management, 800-468-8892

Additional points of contact may be identified prior to construction

Appendix B
Key Emergency Contacts

Following are the key personnel who shall be contacted in the event of an emergency or spill incident.

		Contact Name	Phone Number
1.	**MVP Emergency Contacts**		
	MVP Emergency Coordinator (within 15 minutes of incident)	To be provided prior to construction	
2.	**Contractor Emergency Contact**		
	Contractor Emergency Coordinator	To be provided prior to construction	
3.	**Local Authorities (as necessary)**		
	State Police Local Police Local Fire Department Hospital Ambulance	To be provided prior to construction	
4.	**Environmental Agencies**		
	Notification to be made by an MVP representative. Virginia Department of Emergency Management Watch Center (800)-468-8892 (24 hours)		
5.	**Potential Environmental Remedial Service Contractors** (verify before issuing project-specific SPCC Plan)		
	Clean Harbors Environmental Services, Inc.: 800-645-8265 Safety- Kleen (FS), Inc.: Edward A. Mitchell, 713-750- 5800 U.S.A. Environment: Cesar Garcia, 713-425-6925 or 832-473-5354 (cell phone) WRS Infrastructure and Environment, Inc.: Steve Maxwell, 281-731-0886		

Appendix C
Petroleum and Hazardous Material Spill Report

The Contractor must complete this for any petroleum or hazardous material spill regardless of size, and submit the form to the MVP EC within 48 hours of the occurrence.

Date of Spill_____Incident No.:_____Date of spill discovery _____

Time of Spill_____Time of Spill Recovery_____

Location Name:_____Spread:_____County _____

Section_____Township _____ Range _____

Name and title of discoverer: _____

Type of material spilled and product name

_____

Manufacturer's name: _____

Legal description of spill location _____

Directions from nearest community:

_____

Estimated volume of spill:

_____

Weather conditions: _____

Topography and surface conditions of spill site:

_____

Spill medium (e.g., pavement, sandy soil, water):

_____

Proximity of spill to surface waters or wetland:

_____

Did the spill reach a watercourse? _____ ☐ Yes _____ ☐ No _____

If so, was a sheen present? _____ ☐ Yes _____ ☐ No _____

Direction and time of travel (if in watercourse): _____

Name and telephone number of responsible party: _____

Causes and circumstances resulting in the spill: _____

Extent of observed contamination, both horizontal and vertical (e.g., spill-stained soil in a 5-inch radius to a depth of 1 inch):

_____

Potentially affected resources and installations: _____

Potential impact on human health:

_____

Immediate spill control and/or clean-up methods used and implementation schedule: _____

_____

Current status of clean-up actions: _____

_____

Name, company, address, and telephone number for the following:

Construction Superintendent: _____

Spill Coordinator: _____

Person who reported the spill: _____

Environmental Inspector: _____

On-Scene Agency Coordinator (where applicable): _____

Form completed by: _____ Date _____

Appendix 5:
Landslide Mitigation Plan

Mountain Valley Pipeline Project

Docket No. CP16-10-000

Attachment DR4 General 2c

March 2017

Mountain Valley Pipeline Project

Docket No. CP16-10-000

Landslide Mitigation Plan

Rev. 4, February 2017

(Updates from previous report highlighted in yellow.)

Table of Contents

List of Tables

List of Figures

Appendix

1.0 INTRODUCTION

The Mountain Valley Pipeline (MVP) Project is a proposed 42-inch-diameter natural gas pipeline system that spans approximately 303 miles from northwestern West Virginia (Wetzel County) to southern Virginia (Pittsylvania County). The Project will be constructed and owned by Mountain Valley Pipeline LLC, which is a joint venture of EQT Corporation, NextEra Energy, Inc., Con Edison Gas Midstream, LLC, WGL Holdings, Inc., Vega Energy Partners, Ltd., and RGC Midstream, LLC.

Many portions of the proposed Mountain Valley Pipeline Project (Project) route are in landslide susceptible areas as mentioned in Section 6.6 of Resource Report 6 (Ref. 1) and as shown on Figure 6.4-3 of the same report. Slope information along the Project is provided in Resource Report 1, Appendix 1-I. Landslides in the Project area occur primarily in weathered bedrock or colluvial soil and within old landslide debris located on steep slopes. Numerous landslides on the Appalachian Plateau have developed in soils derived from sedimentary rocks. Shale, especially red beds and shale-limestone sequences, disintegrate rapidly into clayey soil upon exposure. Most landslides involving soil and weathered bedrock consist of smooth, integrated, thin earth-flow slabs that may be many square yards in area but generally are less than about eight feet thick. Commonly, the slabs move no faster than about three feet or six feet per year and are normally underlain by material containing water with a hydrostatic head of as much as seven feet. In both the folded Appalachians and the Blue Ridge Mountains, numerous slow-moving debris slides form in colluvial soil and scree that are particularly abundant on slopes underlain by sandstone and metamorphic rocks.

MVP has performed a review of potential areas of landslide or rockfall concern along the pipeline alignment. This was completed through review of available historic aerial photographs, soils data, and topographic maps to identify indications of potential landslide hazards. Areas investigated as part of this report are shown on the project alignment sheets and erosion and sediment control plans.

MVP has developed this Landslide Mitigation Plan to outline the special procedures and best management practices (BMPs) that will be implemented during the pipeline installation and post-construction periods to mitigate landslide occurrence.

All mileposts (MP) reference herein refer to the October 2016 Proposed Route unless otherwise specified.

2.0 FIELD INSPECTION

MVP has completed field observations of the steep sidehill slope sites where potential stability issues were identified, as summarized Table 1 of this document. The field observations for these sites included slope characteristics, GPS mapping of observed slides, slumps, rockfalls, scarp locations, and the presence of geotropically affected trees, drainage features, and gullying. In 2015, investigations were conducted by a consulting geotechnical engineer with experience in landslide evaluation, whose resume is attached. In 2016 and 2017, additional site visits were conducted by MVP personnel with experience in landslide evaluation.

3.0 SLOPE EVALUATIONS

The occurrence of a landslide is dependent on a combination of site-specific conditions and influencing factors. Common factors that contribute to landslides principally fall into four broad categories (WSDOT 2014):

- Climatic/hydrologic (rainfall or precipitation)
- Geomorphic (slope form and conditions)
- Geologic/geotechnical/hydrogeological (material type and groundwater)
- Human activity

Climatic factors that influence landslides include the duration of rainfall events, intensity of rainfall, type of precipitation (rain or snow), and rainfall conditions over a period of time (antecedent conditions). It is common for landslides to occur after intense or prolonged periods of rain. Some episodes of widespread landslide occurrences correspond to storms that involve the rapid melting of previously accumulated snow by wind and warm rain. The most disastrous landslide events in the Appalachian Plateau region have been associated with persistent rainfall followed by a heavy downpour along steep slopes which causes debris flows and debris avalanches. Debris flows develop on steep slopes as a result of heavy rainfall that saturates the soil, which under the extra weight and lubrication breaks loose and becomes slurry that pulls surface vegetation and large trees downslope. Infiltration of precipitation into surface soils was considered in the mitigation measures presented in this report.

Geomorphic factors that affect slope stability include height and steepness, as well as vegetation and underlying geology. Increased steepness, concave topographic slopes and slope height generally correlate with reduced stability. A lack of vegetative cover will also increase the amount of rainfall that can infiltrate the slope surface. Vegetation generally inhibits surface soil erosion with erosion occurring much more rapidly on bare slopes. Whether water infiltrates into the ground or runs off is influenced by both surface vegetation and the permeability of the geologic substrate, its degree of saturation, and precipitation intensity. Either shallow bedrock conditions or a compact and fine-grained soil unit at depth will tend to cause a saturation and weakening of the near-surface, loosened soil. The approximate depth to bedrock along the pipeline is indicated in Resource Report 6, Appendix 6-B.

As mentioned in Section 1.0, the geologic and geotechnical characteristics of the region contribute to slope instability. Landslides along the project route will occur primarily in weathered bedrock or loose colluvial soil and within old landslide debris located on steep slopes. Exposed sedimentary rock formations can erode rapidly and create soils prone to landslides. Most landslides along the route are expected to be thin earth-flow type slabs rather than deep-seated circular failures. Rockfalls are also a potential hazard below bedrock outcroppings at or near the top of steep slopes associated with the cliff-forming formations such as sandstones, granite, and gneiss. These outcrops may be weathered by wind or rainfall and become loosened, leading to a violent cascade downhill, often triggering a larger landslide. Landslides also commonly recur in the same areas, thus evidence of previous events is important to the slope evaluations. Areas of high groundwater table and surface drainage paths can also contribute to the instability of slopes. Drainage paths or streams can over-steepen slopes from erosion. If known, the Hydrologic Soil Group for the surface soils is indicated in the site description. Hydrologic soil groupings are used to describe the minimum rate of infiltration obtained for bare soils after prolonged wetting.

Human activities are a common contributor to landslide events. Large excavations and fills located in mountainous areas related to rural development have increased the number of and potential for landslides. Development of this type tends to create over-steepened slopes and drainage alteration that leads to the potential for many landslides. The removal of surface vegetation during land development can affect slope stability through increased infiltration of rainfall.

Table 1 contains descriptive notes for each of the 37 slope areas of concern along the pipeline. These descriptions were obtained from Table 6.4-6 and augmented with notes from the field surveys, where

possible. In addition, three areas within Jefferson National Forest (JNF), at the request of JNF personnel, and several areas identified in realigned areas of the route were also investigated and included in Table 1. Six additional areas were investigated at the request of the JNF and are discussed in detail in the *Site-Specific Design of Stabilization Measures in Selected High-Hazard Portions of the Route of the Proposed Mountain Valley Pipeline Project in the Jefferson National Forest*.

	Table 1 - Landslide Concern Areas Crossed by the Mountain Valley Pipeline					
Designation	**Beginning MP**	**Ending MP**	**Length Crossed (feet)**	**Slope (%) [a]**	**Signs of Recent Movement [b]**	**Notes [c]**
MVP-LMP-WE-01	3.3	3.8	2147	33	No*	Dormant slide and/or soil prone to movement. Intersects at least three natural drains.
MVP-LMP-HA-02	28.0	28.2	967	29	No*	Near well appurtenances. Side cut would run across at least three natural drains.
MVP-LMP-DO-03	32.4	32.6	749	32	No*	Dormant slide and/or soil prone to movement. Located at toe of slope. Hillside previously cleared.
MVP-LMP-HA-04	33.4	33.6	570	42	No*	Dormant slide and/or soil prone to movement. Located at toe of slope. Hillside previously cleared.
MVP-LMP-DO-05	34.2	34.4	377	28	No*	Moderate side slope, includes slight pipe bend. Cuts across at least one natural drain.
MVP-LMP-DO-06	34.4	34.6	907	28	No*	Downslope of ridge. Cuts across at least three, possibly four or five natural drains and one or two four-wheeler paths.
MVP-LMP-DO-07	35.1	35.4	869	40	No*	Construction equipment may need to be staged on sidehill here. Southeastern side less steep, may be better to stage.
MVP-LMP-LE-08	43.3	43.5	494	30	No*	Steep side slope, but ridge within right-of-way.
MVP-LMP-LE-09	46.2	46.5	1113	15-33	Yes*	Gravitropism and natural drains on a moderate side slope.
MVP-LMP-LE-10	46.6	46.8	448	36	Yes*	Existing dormant slide possibly upslope, and active within past twenty years. Cuts across at least one natural drain, possibly two.
MVP-LMP-LE-11	53.0	53.3	872	22	No*	Adjacent slopes composed of dormant slides. Moderate side slope directly below cemetery. Cuts across some kind of existing right-of-way or road, and at least two natural drains.
MVP-LMP-LE-12	55.1	55.2	224	35	No*	Moderate side slope, cuts across toe of slope. No signs of recent movement.
MVP-LMP-LE-13	57.2	57.7	806	18 - 40	No*	Right-of-way will run alongside hill with 32% grade and a 40% grade directly below it.
MVP-LMP-BR-14	66.8	67.0	826	15-34	No*	Moderate side slope subjacent to Weston and Gauley Bridge Turnpike Trail.
MVP-LMP-BR-15	69.2	69.5	1128	29	No*	Cuts across one large natural drainage. No signs of recent movement.

	Table 1 - Landslide Concern Areas Crossed by the Mountain Valley Pipeline					
Designation	**Beginning MP**	**Ending MP**	**Length Crossed (feet)**	**Slope (%) [a]**	**Signs of Recent Movement [b]**	**Notes [c]**
MVP-LMP-WB-16	81.8	82.1	1462	35	No*	Route crosses dormant slide area. Moderate side slope. No natural drains, but is directly above house or farm structure. Landowner issues may force it to be on the east side below the road, intersecting at least three natural drains.
MVP-LMP-WB-17	82.5	82.6	602	45	No*	Route cuts through a colluvial slope which is very prone to sliding. Very steep side slope, right above ravine, possibly crossing one natural drain.
MVP-LMP-NI-18	111.7†	111.8†	231	12 – 39	No	Moderately steep slope. Pipeline cuts through either dormant slide or slide-prone material. Not included in October 2016 Proposed Route.
MVP-LMP-NI-19	122.5	123.0	2547	7 – 43	No*	Crosses at least 5 streams or natural drains. Cuts through dormant slide or material prone to sliding.
MVP-LMP-NI-20	123.1	123.2	362	22	No*	Route crosses soil prone to movement. Mild side slope directly below power line right-of-way. Cuts across one natural drain.
MVP-LMP-NI-21	124.3	124.8	648	15 - 20	Yes*	Possible recent landslides, and this portion of route crosses through soil prone to movement.
MVP-LMP-NI-22	127.2	127.4	631	12 – 39	No*	Moderately steep slope below ridge. Cuts through dormant slide or material prone to sliding. Crosses an existing logging road.
MVP-LMP-NI-23	127.9	128.0	423	10 – 60	No*	Moderately steep slope below point. Cuts through dormant slide or material prone to sliding.
MVP-LMP-NI-24	132.0	132.1	646	25	No*	Portion of route is adjacent to soil prone to movement to the west and a dormant slide to the east. Moderate side slope. Cuts across at least one natural drain.
MVP-LMP-GB-25	145.3	146.1	8000	30 - 35	No*	Steep and very long side slope. Cuts across at least 3 natural drains. Two hard 90s one after the other in route.
MVP-LMP-SU-26	164.6	165.15	1320	33 - 43	No*	Steep side slopes outside of construction right-of-way. Two gullies at saddles are outside of the construction right-of-way.
MVP-LMP-MO-27	182.4	182.8	808	18 - 28	Yes*	Some slope movement is indicated on historical imagery within the past 20 years.
MVP-LMP-GI-28	197.4	197.6	1800	18 - 26	No*	Jefferson National Forest:
MVP-LMP-GI-29	198.4	199.1	2300	18 - 35	No*	Jefferson National Forest:
MVP-LMP-GI-30	204.4	204.8	1120	39	No	Lateral slope side cut, paralleling transmission power line.
MVP-LMP-GI-31	211.5	211.8	1184	32 – 53	No*	Very steep slope, centerline may or may not be on ridge. Directly above U.S. 460.

	Table 1 - Landslide Concern Areas Crossed by the Mountain Valley Pipeline					
Designation	**Beginning MP**	**Ending MP**	**Length Crossed (feet)**	**Slope (%) [a]**	**Signs of Recent Movement [b]**	**Notes [c]**
MVP-LMP-MN-32	219.6	220.9	1200	25 - 40	No*	Jefferson National Forest:
MVP-LMP-MN-33	220.6†	220.7†	310	59	No	Very steep slope where route makes a 90 degree turn off the ridge. Very short section, but because of the severity of slope, could be prone to slippage. Cuts across one stream. Not included in October 2016 Proposed Route.
MVP-LMP-MN-34	221.8†	221.9†	380	46	No*	Steep slope runs alongside of knoll, directly above substation. Not included in October 2016 Proposed Route.
MVP-LMP-MN-35	229.2	229.3	640	28	No*	Slight sidehill. Crosses stream.
MVP-LMP-FR-36	261.2	261.2	179	40	No*	Steep side slope, but just for small section. Running just below ridge line through a gulley. Crosses one natural drain.
MVP-LMP-FR-37	263.9†	264.0†	368	34	No*	Steep side slope. Running just below ridge line through a gulley. Crosses one natural drain. Not included in MVP's October 2016 Proposed Route.
	[a] Design slope is based on desktop and field review, or range from map analysis of alignment. [b] Based on historical imagery. [c] Based on available landslide mapping and field survey. * A field review of this site was performed. † Refers to MVP Route 4.0.0 mileposts.					

4.0 STEEP SLOPES AND RED SHALE

The MVP route will cross numerous bedrock strata, including the Conemaugh, Monongahela, and Dunkard Formations and Mauch Chunk Group. These groups contain landslide-prone shale formations that are sometimes referred to as "red beds" and are frequently associated with landslides that occur in the project area. Detailed descriptions of each formation/group are presented below. Figure 1 illustrates areas where the aforementioned shale formations are present along the pipeline route.

Landslides are documented to be associated with red beds that form in the Conemaugh Formation, Monongahela Formation, Dunkard Group, and Mauch Chunk Formation. Red beds refer to shale or siltstone layers that can appear red, reddish-gray, or greenish-gray due to the presence of iron bearing minerals. These shales are generally slightly fissile, jointed, and slickensided. As these shales are exposed to water and oxygen near the surface they weather very easily into a thick mud. In addition, impervious layers located beneath the shale may trap water and cause the weathered shale to become saturated. Steep slopes, that are often present in these areas, along with the weathered shale and mud, produce conditions that increase the likelihood for landslides.

Two common types of landslides include rotational slump, and earthflow. Rotational slump is characterized by the movement of a large mass of weak rock or sediment as a block unit along a curved slip plane. These slumps are large, slow moving and produce several distinctive topographic features. The upper section

(crown or head) is characterized by transversely oriented rupture scarps that can form terraces of displaced blocks. Depressions and pools of water may form and trees may become inclined upslope. The lower section (toe) is characterized by a fan-shaped, bulging mass, and radial ridges and cracks. Vegetation on the toe slopes may be seen leaning in strange directions. Earthflow landslides are smaller in size and result in weathered rock or sediment that flows downslope as a jumbled mass, forming a hummocky topography of ridges and swales.

Conemaugh Formation (Upper Pennsylvanian)

The Upper Pennsylvanian-aged Conemaugh Formation consists of cyclic sequences of shale, siltstone, sandstone, red beds, thin impure limestone, thin nonpersistent coal, and underclay, semi-flint clay, and flint clay. The Conemaugh Formation is formally divided into two members, the upper Casselman Formation and the lower Glenshaw Formation, however, several informal members exist as well. The lower member, the Sandy Grove Sandstone Member, is overlain by the Pittsburgh red shale. Sandstone in the Conemaugh Formation is described as medium-light-gray, very fine- to course grained, locally conglomeratic with well-rounded quartz pebbles and subangular limestone and shale fragments, thin bedded to massive. The shales and siltstones in the Formation are generally described as medium and greenish-gray to grayish-red, slightly fissile to poorly bedded, soft, clayey to silty; includes hematite nodules and discontinuous beds of limestone. The red beds and shales of the Conemaugh Formation are associated with landslides. Coal beds are also found in the Conemaugh Formation and are often underlain by underclay, flint clay, or semi-flint clay. These clays are described as medium-gray to grayish-red, poorly bedded with conchoidal fracture and containing fossil root prints. Coal and limestone beds in the Formation are generally thin bedded (around four feet). Limestones consists of medium-gray to light-grayish brown, nodular paleokarst surfaces, mudstone to packstone, and containing fossils.

Monongahela Formation (Upper Pennsylvanian)

The Upper Pennsylvanian-aged Monongahela Formation consists of non-marine cyclic sequences of sandstone, siltstone, red and gray shale, limestone, and coal. The Formation extends from the top of the Waynesburg coal to the base of the Pittsburgh coal and also includes the Uniontown, Sewickley, and Redstone coals. In West Virginia, the thickness of the Formation generally ranges from 170 feet to 300 feet. Sandstone in the Formation is described as medium-light-gray, very fine- to coarse-grained, conglomeratic with rounded quartz pebbles; thin-bedded to massive. Siltstone and shale in the Formation are described as medium- dark-gray to grayish-red, thin to poorly bedded, slightly fissile, silty, carbonaceous, and slightly calcareous. The shales and siltstones of the Formation, commonly known as red beds, are associated with landslides. Coal beds are also found in the Monongahela Formation and are often underlain by underclay, flint clay, or semi-flint clay. These clays are described as medium-gray, grayish-yellow, grayish-red, poorly bedded and brecciated with conchoidal fracture and containing fossil root prints.

Dunkard Group (Upper Pennsylvanian/Permian)

The Upper Pennsylvanian/Permian-aged Dunkard Group consists of non-marine cyclic sequences of sandstone, siltstone, red and gray shale, limestone, and coal. The Dunkard Group contains the Greene, Washington, and Waynesburg Formations. The maximum thickness of the Group, in Wetzel County, West Virginia, is estimated to be about 1,190 feet. Thin coal beds are often underlain with underclay, flint clay, or semi-flint clay that may contain fossil root prints. The coal beds are often overlain with multi-story, thick channel-form sandstone bodies with undulating, erosive bases and roof shale. Sandstones may grade

upward back into siltstone, and gray, green, or red shale. Calcarious nodules and slickensides are also present in the shales. Red, green, or gray, mudstone or claystone paleosols may also develop indicating periods of wetting and drying. These paleosols are typically overlain by nonmarine lacustrine limestone beds. Individual limestone beds are generally less than five feet thick and display evidence of subaerial exposure. Limestone beds are frequently interbedded with argillaceous limestone, calcareous mudstone, and calcareous shale. Red facies of red colored shale, siltstone, and paleosols are prevalent throughout the Dunkard Group and are associated with landslides.

Mauch Chunk Group (Mississippian)

The Mississippian-aged Mauch Chunk Group consists of red, green, and medium-gray shale, siltstone, sandstone, and some conglomerate with a few thin limestones. The Mauch Chunk Group contains the Bluestone and Princeton, Hinton, and Bluefield Formations. In West Virginia, the thickness of the Group ranges from 970 feet to 4150 feet.

The Bluefield Formation of the Mauch Chunk Group consists of Limestone, siltstone, and shale. Limestone is light-grayish-brown, dolomitic, cherty, and fossiliferous. Shale is medium-gray to light-grayish-red, silty, thin and evenly bedded, very calcareous.

The Hinton Formation overlies the Bluefield Formation and consists of red shale and siltstone; sandstone, limestone, and dolomite are also present. The sandstone member at the base of the Formation is light-gray to white, very fine- to coarse-grained, cross-bedded quartzose with few scattered rounded quartz pebbles. The middle member of the Formation, the red member, consists of red silty shale that is locally calcareous and interbedded with thin beds of sandstone, siltstone and impure limestone, and dolomite. The limestone member of the Hinton Formation consists of dark calcareous shale or gray to brownish-gray, fossiliferous, impure shaly limestone. The upper member of the Hinton Formation consists of red, greenish-gray, and gray shale which is locally calcareous and contains several nonpersistent lenticular beds of sandstone and siltstone.

The Princeton Sandstone consists of white quartzose cross-bedded massive sandstone with rounded medium grains and some fine- to coarse-grained and conglomeratic zones. The sandstone is cemented with calcium carbonate or silica. Some gray to red shale, limestone, and coal are also present.

The Bluestone Formation consists of mostly interbedded shale, mudstone, siltstone, sandstone, limestone, and thin, impure coal seams. The lower member of the Bluestone Formation, the gray shale member, consists of gray and black shale which contains some beds of siltstone, sandstone, red shale, and limestone. The shale is calcareous and locally carbonaceous. The upper half of the member is mostly conglomeratic sandstone. The middle member, the red member, is composed of calcareous red shale with some siltstone, small amounts of calcareous sandstone and lenticular beds of limestone. The upper member of the Bluestone Formation consists of white, gray and greenish-gray sandstone. The sandstone is medium- to coarse-grained and locally conglomeratic and contains cross-bedding. The sandstone is interbedded with gray, green, black, and red shale and siltstone.

The Mauch Chunk consists of red and green shales, similar to the red beds found in the Conemaugh and Monongahela Formations. The shales are moderately high in clay minerals, are highly susceptible to weathering, and are prone to mass wasting. The residual soils have a moderate shrink-swell potential and are susceptible to gully erosion.

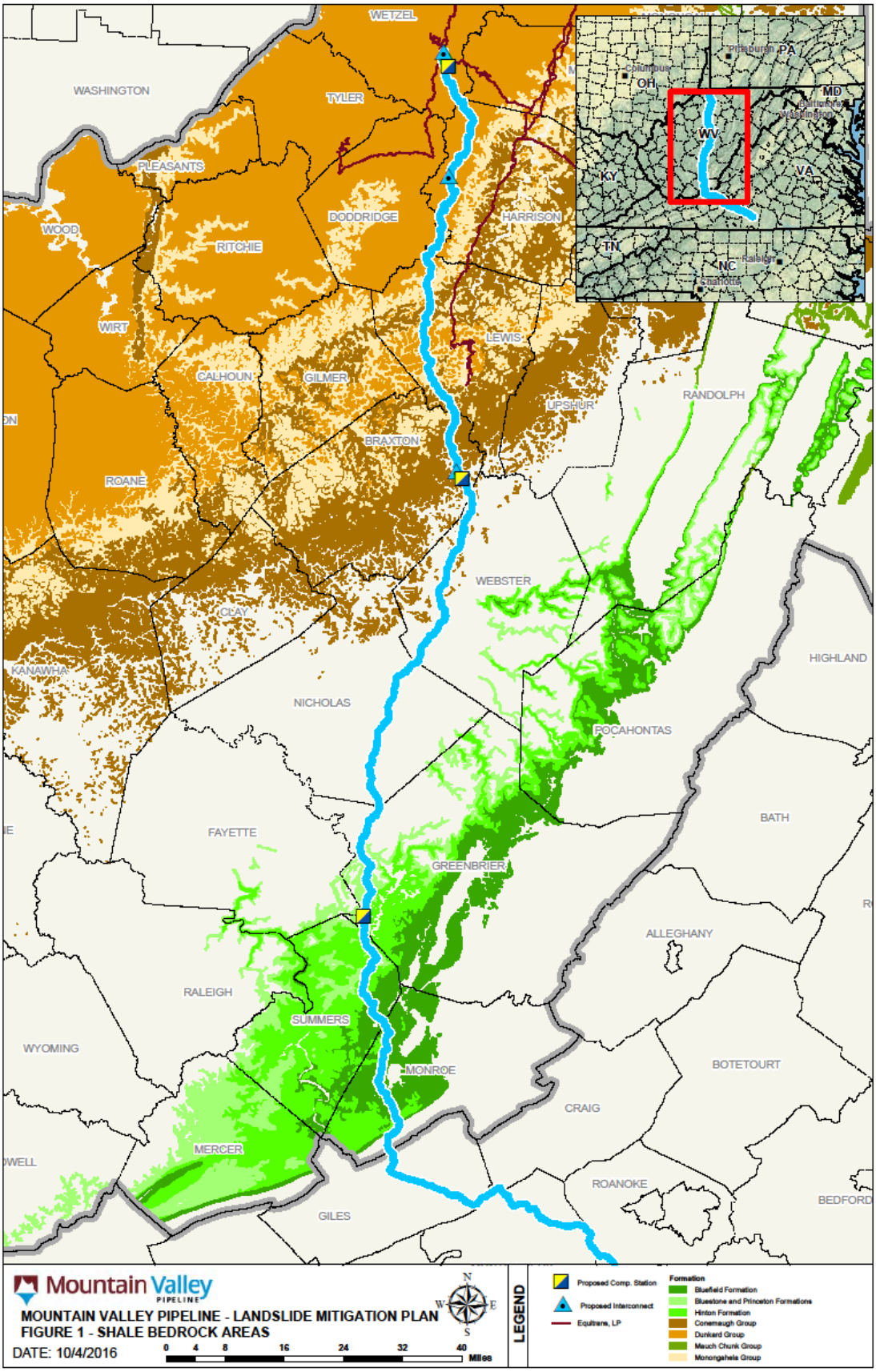
WETZEL
WASHINGTON
TYLER
PLEASANTS
DODDRIDGE
HARRISON
WOOD
RITCHIE
WIRT
LEWIS
CALHOUN
GILMER
UPSHUR
RANDOLPH
BRAXTON
ROANE
WEBSTER
CLAY
KANAWHA
HIGHLAND
NICHOLAS
POCAHONTAS
BATH
FAYETTE
GREENBRIER
ALLEGHANY
RALEIGH
SUMMERS
WYOMING
MONROE
BOTETOURT
CRAIG
MERCER
ROANOKE
BEDFORD
GILES
PA
OH
MD
WV
VA
KY
TN
NC
Mountain Valley PIPELINE
MOUNTAIN VALLEY PIPELINE - LANDSLIDE MITIGATION PLAN
FIGURE 1 - SHALE BEDROCK AREAS
DATE: 10/4/2016
0 4 8 16 24 32 40 Miles
N
W
E
S
LEGEND
Proposed Comp. Station
Proposed Interconnect
Equitrans, LP
Formation
Bluefield Formation
Bluestone and Princeton Formations
Hinton Formation
Conemaugh Group
Dunkard Group
Mauch Chunk Group
Monongahela Group

5.0 POTENTIAL MITIGATION MEASURES

The basic strategies to protect against landslides and slope instability along the pipeline corridor during construction are stabilization, drainage improvement, and erosion and runoff control. Mitigation measures that may be used on MVP are outlined below and prescribed to specific project areas in Section 8.0. Construction typical drawings for selected mitigation measures are shown in the Appendix.

- Excavation and/or Regrading of Upgradient Head Soils: Regrading to a flatter slope upgradient of the pipeline excavation will increase the slope stability factor of safety by reducing the weight of soil at the top of the slope.
- Bedrock Embedment: Installing the pipeline completely within a bedrock trench will protect the pipeline integrity in the event of a surficial landslide.
- Dewatering: Dewatering a slope is often the most cost effective means to stabilize a slope and prevent future landslides. Saturated soil has an increased unit weight and higher pore water pressure, both of which negatively affect the slope stability factor of safety. To prevent soil from becoming saturated, runoff will be directed away from the potentially unstable slope and drains will daylight subsurface water.
- Erosion and Runoff Control: Typical erosion and sediment control BMPs will be implemented during pipeline construction and will be detailed in the Project plans. Installing additional erosion and sediment control measures will increase slope stability by minimizing soil saturation, as in dewatering. BMPs that are recommended for slope stabilization are summarized below.
    - Berms: Diversion berms will be used to intercept, divert, and convey surface runoff from steep slopes to decrease the chance of rill or gully erosion to occur which could weaken the stability of steep slopes. The outlet of all diversion berms will be armored with riprap to act as an energy dissipater and prevent localized erosion.
    - Rock Outlet Protection (Riprap): Rock outlet protection (riprap) will be used at the outlets of trench drains, sidehill low-point drains, berms, culverts, etc., to control the velocity and potential for erosion of the storm water runoff.
    - Sidehill Low-Point Drain: Sidehill low-point drains will be installed from the main pipeline trench at the upgradient side of a trench breaker to drain water out of the trench and outlet it to an area with rock outlet protection.
    - Trench Drain: Trench drains will be installed on side slopes and steep slopes in order to dewater the uphill slope.
    - Water Bar (Broad-Based Dip): Water bars will be used across the right-of-way, sloped to drain water off of the pipeline right-of-way.
    - Trench breakers (Trench Plugs): Trench breakers constructed of sandbags will be used in trenches along pipes to control water flowing through the pipeline trench. Excessive amounts of water will saturate the slope and destabilize it.
    - Hard Armor: Hard armoring existing drainage channels with riprap or articulated concrete block (ACB) will minimize slope saturation and erosion by stormwater. Areas susceptible

to future erosion, especially above the pipeline, may be armored with articulated concrete block (ACB) or riprap, as necessary.

- Rerouting: Minor route adjustments may be made to avoid landslide-prone areas identified during construction.

Construction operations will be staffed with geotechnical personnel who will prescribe additional mitigation measures as needed when subsurface conditions are revealed. The following measures are not currently anticipated but may be implemented during construction, as needed.

- Buttressing: An earth, rock, or riprap fill buttress in front of an unstable slope will increase the weight of the material at the toe of the slope, thereby increasing the slope stability factor of safety.
- Reinforced Soil Slope: Incorporating multiple layers of geogrid or other geosynthetics between compacted lifts of soil or crushed stone will increase the shear strength of the fill, decreasing the risk of a slope movement.
- Rockfall Protection (Fencing): Protection measures such as rock fences, placement of concrete barriers, or creating catchment areas may be added where excavation is planned at the top of steep slopes to limit loose debris and protect downslope property or roadways.
- Soil-Nail Stabilization: Soil-Nail Stabilization is used to stabilize unstable soil slopes or allow for safe over-steepening (if required) of new or existing soil slopes. Tension-resisting steel elements will be inserted into holes in the soil surface and grouted or directly driven into the ground surface to anchor a steel cable or net system at the surface of the ground.

6.0 MAINTENANCE AND MONITORING

Maintenance and monitoring measures will be implemented to confirm the pipeline integrity in areas susceptible to landslides.

In all of the areas where there was evidence of a previous landslide in close proximity to the pipeline, or there remains some uncertainty, slope monitoring will be conducted. In some cases, this may be limited to periodic visual evaluation, but in others, more robust monitoring may be appropriate. The need for future monitoring will be field determined by an engineering geologist or geotechnical engineer during construction. If monitoring is necessary, specific requirements will be established for each location following construction.

7.0 SIDEHILL CONSTRUCTION

In sidehill construction areas (as defined on the project alignment sheets), the following construction practices shall be observed (in addition to landslide mitigations prescribed for locations specified in this document):

- Seeps or springs encountered in the excavation shall be intercepted by transverse trench drains, cutoff drains, or similar, and directed out of the pipeline ditch to an energy dissipating structure (such as a riprap apron).
- Backfill material shall exclude organic material, vegetation, stumps, root systems, frozen material, and rocks larger than three inches in diameter.

- Backfill operations shall be performed when soil moisture content is suitable for compaction, at or near optimum moisture content (i.e., not immediately following a large precipitation event or when soil is excessively dry).
- Backfill material shall be placed in compacted lifts no greater than 12 inches thick.
- Backfill compaction shall be accomplished using the back of an excavator bucket, sheep's foot roller, or similar.
- Where a temporary cut and fill surface is required, any ground fractures forming near the cut/fill line or the pipeline ditch shall be repaired to prevent water infiltration.
- All streams, gullies, natural drains, field roads or trails, and other water conveying features shall be properly recontoured such that the permanent right-of-way is protected from preferential water accumulation and infiltration.

8.0 SITE SPECIFIC MITIGATION

Recommendations for landslide mitigation at each of the 37 areas identified in Table 1 are described below. Landslide mitigation typical detail drawings are appended.

Generally, landslide mitigation will depend heavily on the installation of appropriate drainage and erosion control measures during pipeline construction (as described in Resource Report 6.6.1.2) and proper right-of-way reclamation. Backfilling operations in the areas discussed below and all sidehill construction areas identified on the alignment sheets (as discussed in Section 7.0) will be accomplished by following specific guidelines. Fill material will exclude organic material, vegetation, stumps, root systems, and rocks larger than three inches in diameter. When placed in the trench, this select material will be placed in compacted lifts of no greater than 12 inches thick. Compaction may be accomplished using the back of an excavator bucket, a sheep's foot roller, or similar. Where a cut and fill surface is required, contractors will ensure that any ground fractures that form at the interface of that surface and the pipeline ditch are repaired. Finally, inspectors or on-site engineers/geologists will ensure that all identified streams, gullies, natural drains, field roads or trails, and any other water conveying features are properly recontoured such that the permanent right-of-way is protected from preferential water accumulation and infiltration.

Additional mitigation measures beyond these may be required depending on site specific conditions. These are described below based on the results of the field investigations.

- **MVP-LMP-WE-01 (MP 3.3 to 3.8):**

  The pipeline in this area runs along the crest of a ridge between MP 3.3 to 3.5, drops down along a steep side slope between MP 3.5 and 3.8, and continues along the ridgeline beyond MP 3.8. The primary area of concern falls between MP 3.55 and 3.77. The side slope in this area varies from 41.5 % to 51.2% below and above the pipeline, respectively.

  Although the field survey found no evidence of recent slides in this area, the state landslide topographic maps indicate dormant slides are located in this vicinity. The field survey did observe three primary gullies draining to the east down this bowl-shaped slope.

  As this area may be prone to landslides, the right-of-way will be kept drained by installing transverse trench drains along the right-of-way. The trench drain will convey water out of the

pipeline trench. The gullies noted during the site visit will be restored to original contours to facilitate surface water drainage. The ultimate protective measure for the pipeline in this area will be embedment of the pipe within the local bedrock.

- **MVP-LMP-HA-02 (MP 28.0 to 28.2):**

The pipeline in this area runs entirely along the crest of a ridge with steep side slopes ranging from 31.2% to 54%. This location is near well appurtenances at MP 28.25 located approximately 40 feet east of the pipeline.

A 10-foot wide slump was noted in the field survey approximately 75 feet west of the pipe centerline at MP 27.95 on the side slope. A large rock outcrop was also noted on the east side near the pipe centerline at MP 28.0. Multiple gullies were observed outside of the right-of-way from MP 28.1 to 28.2.

As the pipeline follows the ridge and the existing slump will not be affected by construction operations, no additional mitigation is required at this location. Where practical, the pipe trench will be located in bedrock to protect the pipe in the event that the subjacent slope fails.

- **MVP-LMP-DO-03 (MP 32.4 to 32.6):**

The pipeline in this area runs downslope from a crest at a slope of 30% to 35% before crossing a stream and cutting across the toe of a side slope between MP 32.3 and MP 32.55. Although historical imagery shows no signs of recent movement, the hillside was previously cleared and landslide topographic maps show this portion of the route crossing through dormant slides and/or soil prone to movement. The soils in this region were classified as a Gilpin-Peabody Complex or Vandalia Silty Loam (NRCS Hydrologic Soil Group C).

The lower section of the slope was recently cleared and is mainly vegetated with grasses and/or small shrubs. The upper portion is vegetated with trees and overgrown with shrubs. Along the toe of the slope, the existing three-foot-wide stream is actively eroding the toe as indicated by the steep cut bank and slumping of material into the stream. A scarp was indicated in the field report at MP 32.4 that was approximately 12-feet tall and 50-feet long with evidence of gravitropism.

The area with visible scarp and steep side slopes following it may be prone to landslides. In this area, a trench drain will be installed on the high side of the right-of-way, daylighting to the low side. It should also be buttressed with a riprap fill at the edge of the right-of-way, if needed during construction. At the steep downslope before the stream crossing, water bars in conjunction with trench breakers and trench breaker daylight drains will be installed.

- **MVP-LMP-HA-04 (MP 33.45 to 33.6):**

The pipeline in this area runs entirely along the crest of a ridge with steep side slopes ranging from 34% to 48%. The primary area of concern falls between MP 33.45 to MP 33.6. As the pipeline excavation runs along the crest it crosses an existing right-of-way with an underground pipe near MP 33.55.

During the field observation no evidence of mass movement was observed on the vegetated slopes or existing cleared right-of-way. Soils in this section were classified as Gilpin-Peabody Complex or Gilpin-Upshur Complex (NRCS Hydrologic Soil Group C).

No additional mitigation measures are necessary in this area.

- **MVP-LMP-DO-05 (MP 34.2 to 34.4):**

The pipeline in this area runs along a side slope and crosses a number of gullies between MP 34.25 and MP 34.35 with side slopes ranging from 25% to 48%. The primary area of concern lies between MP 34.25 and MP 34.35. Historical imagery shows no recent signs of landslide movement in the area, and the soils were classified as Gilpin-Peabody Complex (Very Stony, NRC Hydrologic Soil Group C).

Rock armoring (or ACB) will be used between MP 34.25 to MP 34.32 after backfill of the pipeline excavation to help stabilize the gully crossings, which will be restored to their original contours. A trench breaker, in conjunction with a sidehill low-point drain which will outlet to a rock outfall protection location, will be used at the low point near MP 34.35. Where practical, the pipe trench will be located in bedrock to protect the pipe from shallow soil movements.

- **MVP-LMP-DO-06 (MP 34.4 to 34.6):**

The pipeline in this area runs along steep side slopes and crosses a number of gullies as well as an area that is a cut slope adjacent to an existing road with visible slumps and associated scarps. The slopes in this area range from 17% to 42%.

The most critical area is a 150-foot-long, 300-foot-wide section next to an existing cut slope with multiple large slumps and scarps. The field reports also noted a long coal seam with standing water and saturated slopes below the seam. The soils in this region were noted as Gilpin-Peabody Complex, very stony (NRCS Hydrologic Soil Group C).

The area exhibiting slumps and scarps must be stabilized by removing and replacing the slumping soils prior to placing additional material in that area. Transverse trench drains will be installed uphill of the pipeline to cut off water ponding near the coal seam outcrop. Gullies will be restored to their natural contours to facilitate drainage across the right-of-way. Where practical, the pipe trench will be located in bedrock to protect the pipe in the event that the subjacent slope fails.

- **MVP-LMP-DO-07 (MP 35.15 to 35.35):**

The pipeline in this area runs along the crest of a ridge between MP 35.15 to MP 35.35 with steep side slopes ranging from 27% to 69%. Historical imagery shows no signs of recent landslide movement and the soils in the area were classified as Gilpin-Peabody Complex, very stony (NRCS Hydrologic Soil Group C).

A trench breaker should be used in the trench in conjunction with a sidehill low-point drain that outlets to a rock outfall protection location at the low point near MP 35.25. Where practical, the pipe trench will be located in bedrock to protect the pipe in the event that the subjacent slope fails.

- **MVP-LMP-LE-08 (MP 43.35 to 43.45):**

The pipeline in this area will be constructed along the ridgeline between MP 43.15 to 43.2, then at the local peak turns slightly eastward and runs approximately 100 to 200 feet from the top of the adjacent ridgeline to the west between MP 43.2 to 43.45. The remainder of the pipeline in this area follows the existing saddles and ridgeline to the southwest between MP 43.45 through 43.65. The primary area of concern falls between MP 43.25 and 43.45.

The side slopes in this area vary from approximately 58% above the pipeline and 53% below the pipeline. The pipeline right-of-way in this area is crossed by an existing gas pipeline at approximately MP 43.35. During the field survey, multiple rock outcrops were observed along the top of the slope/ridgeline that were undercut at the base up to five feet. In addition, large boulders located downslope of these outcrops indicate that future rockfall in the area is possible. Some evidence of gravitropism was noted at the top of slope above the pipeline centerline, which indicates that soil movement has occurred in the past. Although the field survey found little to no evidence of recent slides in this area, the state landslide topographic maps indicate dormant slides are located in this vicinity. The NRCS soil classification for this area is Hydrologic Soil Group C soil that represents a sandy clay loam.

Transverse trench drains will be installed in the pipeline trench. Water bars in conjunction with trench breakers with drains will be installed in the steeper downhill sections of the pipeline. Where practical, the pipe trench will be located in bedrock to protect the pipe in the event that the subjacent slope fails.

- **MVP-LMP-LE-09 (MP 46.2 to 46.5):**

In this area, the pipeline right of way is aligned to the eastern side of a knoll from about MP 46.25 to 46.4 where it follows a saddle to about MP 46.5. Side slopes in the area range from approximately 15% to 33%. Soils in the area are classified as Gilpin-Upshur silt loams, corresponding to NRCS Hydrologic Soil Group C.

The site visit revealed numerous rock outcrops about the knoll between MP 46.25 and 46.4. Several swales and evidence of gravitropism were observed between MP 46.4 and 46.5. The area is forested.

Transverse trench drains will be installed in sidehill portions of the alignment and the ground surface will be restored to existing contours. Where practical, the pipeline trench will be located in bedrock to protect the pipe from shallow soil movements.

- **MVP-LMP-LE-10 (MP 46.6 to 46.8):**

The pipeline in this area has been rerouted since the initial field visit to be constructed generally along the ridgeline in this area. The primary area of concern falls between MP 46.5 and 46.8 on the western slope. The western side slopes in this area have an approximate 18 to 25% grade and the eastern side slope (located over the uphill ridgeline) have varying range of slopes (20 to 40%) with an average slope of approximately 25%.

During the field survey, one scarp and one gully were located on the eastern slope area and two gullies and two scarps were observed on the western side slope. The gullies have been delineated as streams. Some evidence of gravitropism was noted along the top of the western slope above the pipeline centerline, which indicates that soil movement has occurred in the past. Although the field survey found little to no evidence of recent slides in this area, the state landslide topographic maps indicate dormant slides are located in this vicinity and historical scarps were present. The NRCS soil classification for this area is Hydrologic Soil Group C soil that represents a sandy clay loam.

Transverse trench drains will be installed in the pipeline trench through the sidehill portion of the alignment. Water bars in conjunction with trench breakers will be installed in the steeper downhill

sections of the right-of-way. Gullies will be restored to original contours to facilitate drainage across the right-of-way. Where practical, the pipe trench will be located in bedrock to protect the pipe from shallow soil movements.

- **MVP-LMP-LE-11 (MP 53.0 to 53.3):**

A majority of the pipeline in this area is to be constructed along the existing ridgeline on the western side slope between MP 52.9 to 53.35. An existing cemetery is located at the top of the slope approximately 100 feet east of MP 53.1 and creates a gently sloping ridgeline. A gated roadway located just south of the cemetery also parallels the proposed gas pipeline to the east along the ridgeline at a distance/offset of approximately 50 feet between MP 53.05 through 53.2. An abandoned road right-of-way located on the western slope crosses the gas pipeline at MP 53.1.

During the field survey, multiple road failures were identified along this abandoned right-of-way. An existing gas line that runs northwest to southeast intersects the new pipeline at MP 53.2. The primary area of concern falls between MP 53.0 and 53.15; the western side slopes in this area have an approximate 25% to 30% grade.

Seven gullies, some of which were delineated as streams, were identified on the western slope. Although the field survey found no evidence of recent slides in this area, the state landslide topographic maps indicate dormant slides are located in this vicinity. The NRCS soil classification for this area is Hydrologic Soil Group C soil that represents a sandy clay loam.

In areas where the pipeline crosses gullies and natural drains, the grade will be restored to original contours to facilitate drainage. Water bars in conjunction with trench breakers will be installed in the steeper downhill sections of the right-of-way. Transverse trench drains will be installed in sidehill sections of the right-of-way to prevent saturation of the trench backfill. Where practical, the pipe trench will be located in bedrock to protect the pipe from shallow soil movements.

- **MVP-LMP-LE-012 (MP 55.1 to 55.2):**

The pipeline in this area will be constructed perpendicular to a valley. The northwestern slope section of the pipeline starts at MP 54.9 (top of slope) and runs down slope to MP 55.1 at Copley Road located at the toe of slope. The pipeline will then cross under an existing drainage ditch, Copley Road, and stream. The pipeline then ascends the adjacent slope from MP 55.1 (Copley Road at toe of slope) to MP 55.25 (top of slope). The primary areas of concern are the two aforementioned side slopes that fall between MP 54.95 and 55.25.

The northwestern side slope in this area is well vegetated with trees and shrubs and has an approximate grade that ranges from 35% to 45%. A 20-foot high rock outcrop is located at the toe of slope on the northwestern side of Copley Road. A “Falling Rocks” warning sign is also located along this section road. Many of the trees located throughout this slope show signs of gravitropism that indicates soil movement on the slope has occurred in the past. The southeastern side slope is also well vegetated with trees and shrubs and has an approximate grade that ranges from 43% to 53%. The NRCS soil classification for this area is Hydrologic Soil Group C soil that represents a sandy clay loam.

Water bars in conjunction with trench breakers will be installed along the pipeline in this area. Trench breaker daylight drains will be installed at the base of some trench breakers to allow for

discharge of infiltrated water from the trench to areas outside or downstream of the area of concern. At this time, stabilization measures for the very steep slope superjacent to Copley Road have not been finalized as the work will require approval from the owner of the road, but MVP anticipates that a highwall revetment may be required.

- **MVP-LMP-LE-13 (MP 57.2 to 57.7):**

The pipeline in this area runs along the crest of a ridge, then at a local peak runs along steep side slopes on the west side of the ridgeline between MP 57.3 and 57.6. The slope below this area of concern also has two gullies with one associated seep located down gradient to the northwest, off of the right-of-way. The gullies lead to a creek at the toe of the slope that is approximately 10 feet wide. The creek did not form significant cut slopes or show signs of significant toe erosion. Across the side slopes, signs of gravitropism were observed. Tree deformation was more significant at the steep section and was present down to the toe of the slope. The corridor in this area also crosses two abandoned roads. The forest floor has little to no vegetative cover, occupied by small shrubs and ferns with silty clayey sand and sandstone cobbles and boulders scattered across the slope. Historical imagery shows no recent signs of movement.

Transverse trench drains will be installed in the pipeline trench through the sidehill area of the alignment. Where practical, the pipe trench will be located in bedrock to protect the pipe from shallow soil movements.

- **MVP-LMP-BR-14 (MP 66.8 to 66.95):**

The pipeline in this area is to be constructed subjacent to the Weston and Gauley Bridge Turnpike Trail, sidehill along a moderate side slope. The trail follows the ridgeline with moderate side slopes in the vicinity. The pipeline crosses the trail at approximately MP 66.95. Soils in this area are classified as Gilpin-Upshur silt loam (NRCS hydrologic soil group C).

The area is generally wooded but is a vegetated open field in the vicinity of MP 66.9 to 66.95. No evidence of recent or historic slope movement was observed at this location.

Transverse trench drains will be installed in the sidehill portion of this area.

- **MVP-LMP-BR-15 (MP 69.2 to 69.5):**

The pipeline in this area is to be constructed along the ridgeline between MP 69.0 to 69.2, then runs approximately 500 feet downslope from the adjacent ridgeline to the west between MP 69.2 to 69.45. The remainder of the pipeline in this area follows the existing saddles and ridgeline to the southwest of MP 69.45. The primary area of concern falls between MP 69.2 and 69.45.

As the property could not be accessed due to landowner restrictions, no field survey or report was prepared for this sidehill area, and the preliminary evaluation was prepared based on summary descriptions provided by routing engineers and publically available imagery and information for the area. The side slopes upgradient (west) of the pipeline right-of-way range from approximately 41% to 67% and downgradient (east) from 28% to 36%. The area is well vegetated with trees. Historical imagery does not suggest recent landslide/soil movement in the area, nor does it cross an existing or dormant slide. The NRCS soil classification for this area is Hydrologic Soil Group C soil that represents a sandy clay loam.

Transverse trench drains will be installed on the upgradient edge of the right-of-way, conveying the water out of the area of concern. Water bars in conjunction with trench breakers will be installed at the steep downhill sections of the right-of-way. Sidehill low point drains will be installed at selected trench breakers.

- **MVP-LMP-WB-16 (MP 81.8 to 82.1):**

The pipeline in this area will be constructed along the upgradient edge of an existing, ephemeral drainage between MP 81.8 and 82.0 with moderately steep side slopes. Dave Cowger Hill Road is located upgradient of this pipeline segment. The upgradient slopes between the road and the pipeline range from 40% to 45% and 150 to 250 feet in length. The pipeline then runs up the moderately steep slope to the south (approximately 52% grade) to the top of a saddle at MP 82.05. From the top of the saddle, the pipeline runs at an angle across a relatively steep slope (slope grade ranges from 28% to 63% with angled pipeline grade ranging from 18% to 35% in the trench) to the toe of slope in a valley at MP 82.3.

All of the slopes appear to be heavily vegetated with trees and the forest floor is comprised of scattered shrubs and sparse vegetation. During the field survey, five significant gullies were identified between MP 81.9 and MP 82.0. These gullies range in width from three feet to 20 feet; four of them are delineated as streams. Although the field survey found no evidence of recent slides in this area, the state landslide topographic maps indicate dormant slides are located in this vicinity. The NRCS soil classification at MP 81.8 is Hydrologic Soil Group B soil that represents a silt loam or loam and MP 81.9 to 82.1 is Hydrologic Soil Group C soil that represents a sandy clay loam.

Water bars in conjunction with trench breakers will be installed at the steep downhill sections of the pipeline in this area. Transverse trench drains will be installed in the pipeline trench. Gullies will be restored to their natural contours to facilitate drainage across the right-of-way; the gully not delineated as a stream will be armored with rock or ACB to minimize erosion. Where practical, the pipe trench will be located in bedrock to protect the pipe from shallow soil movements.

- **MVP-LMP-WB-17 (MP 82.5 to 82.6):**

The pipeline runs up a moderate side slope to the south, across a natural drain, and up a steep ridge. The side slopes vary from 37% to 70%. However, the pipeline alignment avoids the steepest sections. At MP 82.6 the pipeline crosses a significant natural drain. From MP 82.6 to 82.9 the pipeline runs directly up a steep slope (44% to 55%).

Both the historical imagery and the field survey indicated no signs of recent slope movement or gravitropism. The soil type in this area has been identified as sandy clay loam, but colluvial material may be present near the drain paths which could be unstable.

In areas where the pipeline crosses gullies and natural drains, the grade will be restored to original contours to facilitate drainage. Transverse trench drains will be installed in the sidehill portion of the alignment in this area. Water bars in conjunction with trench breakers and drains will be installed in the steeper downhill sections of the right-of-way.

- **MVP-LMP-NI-18 (MP 111.7 to 111.8 -MVP Route 4.0.0):**

The area of concern runs between MP 111.7 and 111.85 (MVP Route 4.0.0) where the pipeline corridor goes down a ridge with side slopes between 35% and 47%. At MP 111.85, the pipeline

corridor makes a 90-degree bend and continues normal to the slope, reaching a significant drainage crossing at MP 111.92.

Historical imagery shows no signs of recent landslide movement However, the landslide topographic maps show the pipeline running through dormant slides and/or material prone to landslide movement. No field survey or report was completed in this area as the property could not be accessed due to landowner restrictions. The soil in this area was classified as Clifftop Channery Silt Loam, very stony (NRCS Hydrologic Soil Group C).

The pipeline in this area has been re-routed and this area is no longer of concern.

- **MVP-LMP-NI-19 (MP 122.5 to 123.0):**

The pipeline in this section traverses side slopes ranging from 28% to 43% and crosses four drainages and under a transmission line and road.

Although historical imagery reveals no signs of recent landslide movement, this section cuts through an area with dormant slides and/or material prone to sliding. Soils in the region were classified as a variety of different soil groups (NRCS Hydrologic Soil Groups A, C and D). The field survey revealed numerous natural drains and several large boulders along and adjacent to the route. Some areas showed evidence of gravitropism and hummocky terrain.

Transverse trench drains will be installed in the pipeline trench throughout the sidehill area. Numerous boulders and rock outcrops suggest that bedrock will be relatively shallow in the area and that the pipeline trench will be located in bedrock, minimizing the potential for damage due to earth movement.

- **MVP-LMP-NI-20 (MP 123.1 to 123.2):**

The pipeline in this area crosses an existing gully and seep at MP 123.1, crosses a sidehill parallel to a cleared existing power line right-of-way at a slope of 12.5% between MP 121.13 to 123.2, and then runs normal and downhill on a well-vegetated steep slope with slopes ranging from 30% to 60% between MP 123.13 to 123.2.

The field survey noted one seep near MP 123.2 that was actively flowing to a gully that crosses the corridor just to the north. The gully becomes up to 10 feet wide and three feet deep near the corridor centerline and has been delineated as a stream. Although the historical imagery shows no signs of recent movement, the landslide topographic map shows this portion of route crosses through soil prone to movement. The field survey defined the soil as decomposed plant material, silt loam, and silty clay loam.

In areas where the pipeline crosses gullies and natural drains, the grade will be restored to original contours to facilitate drainage. Water bars in conjunction with trench breakers will be installed in the steeper downhill sections of the right-of-way. Transverse trench drains will be installed in the sidehill portions of the alignment.

- **MVP-LMP-NI-21 (MP 124.35 to 124.75):**

The pipeline in this area runs along the crest of a moderately sloping ridge then continues to run south downslope off the ridge though a valley with steep slopes. The valley located between MP 124.5 and 124.6 has a seasonal stream located at the toe of the slope. The steep slopes around the

valley are mostly vegetated by trees. The forest floor has little to no vegetative cover and was covered in fallen leaves at the time of the site visit. No signs of erosion were observed from the seasonal stream at the toe of the slope but erosion around the base of trees was observed.

Historical imagery shows possible signs of recent movement and the landslide topographic map shows this portion of the route crosses through soil prone to movement.

Trench breakers and drains will be installed in the steeper downhill sections of the right-of-way.

- **MVP-LMP-NI-22 (MP 127.2 to 127.4)**:

The pipeline in this area runs northwesterly upslope along a crest of a ridge then turns southerly downslope between MP 127.2 to MP 127.0. The primary area of concern runs from MP 127.2 to MP 127.5. The steep slopes off the side of the crest where the pipeline runs along the slope vary from 30% to 40%.

Historical imagery and the site visit revealed no signs of recent landslide movement. However, landslide topographic maps show materials that are prone to landslide movement. Rock outcrops were observed along the pipeline right of way during the site visit. An existing logging road with steep high-side cut, approximately three feet high, is located at the southern end of the segment.

Transverse trench drains will be installed at low points along the pipeline alignment to facilitate drainage of the pipeline trench and prevent slope saturation.

- **MVP-LMP-NI-23 (MP 127.9 to 128.0):**

The pipeline in this area runs along the crest of a ridge between MP 127.8 to 127.92, then drops down along a steep side slope between MP 127.92 to MP 128.0. The primary area of concern falls between MP 127.92 and MP 128.0. The side slope in this area varies from 30% to 40% along the pipeline.

The site visit revealed that the sidehill area of the pipeline route contained numerous rock outcrops. Historical imagery shows no sign of recent landslide movement. However, landslide topographic maps show slide prone material. NRCS data show the soils in this area to be a sandy loam and silt loam.

If possible, the pipeline alignment should be rerouted to traverse directly uphill to the peak of the knoll and back downhill, eliminating the sidehill portion. If this is not possible, transverse trench drains will be installed in the sidehill portion of this area. Water bars in conjunction with trench breakers and drains will be installed in the steeper downhill sections of the right-of-way.

- **MVP-LMP-NI-24 (MP 132.0 to 132.1):**

The pipeline in this area runs along a side slope and crosses a gully with two contributing seeps west of the pipeline between MP 132.0 to MP 132.1 and then continues southeasterly down a moderately steep slope.

Although the field survey and historical imagery show no signs of recent landslide movement, the landslide topographic maps show soil prone to movement uphill (west) of the pipeline excavation and a dormant slide downhill (east) of the pipeline excavation. The soil type in this area has been defined as a Clifftop Channery silt loam, very stony, Hydrologic Soil Group C.

The primary area of concern lies between MP 131.9 and MP 132.1 with side slopes ranging from 25% to 35% below and above the pipeline. Transverse trench drains will be installed along the pipeline trench and will outlet the water away from the area of concern.

A second area of concern lies between MP 131.8 to MP 132.0, where steep slopes and a drainage way are present. Where the pipeline crosses a gully, the grade will be restored to original contours to facilitate drainage. Water bars in conjunction with trench breakers will be installed in the steeper downhill sections of the right-of-way.

- **MVP-LMP-GB-025 (MP 145.3 to 146.1):**

This pipeline section starts along the broad crest, and crosses a number of drainage ways and small access roads, with some minor turns and two 90-degree bends. The area of concern falls between MP 145.8 and MP 146.1. After a 90-degree bend, the pipeline runs downhill normal to the slope, then crosses a paved road and river.

The steep slopes to the west of the corridor were noted as densely vegetated and overgrown with abandoned logging roads remaining. There will be some gully and road crossing in this area but no mitigation measures are recommended for potential landslides in this area. The soils in the area of concern include sandy loam and silty loam from NRCS soil groups A and C, respectively.

Water bars in conjunction with trench breakers and drains will be installed in the steeper downhill sections of the right-of-way.

- **MVP-LMP-SU-26 (MP 164.6 to 165.15):**

The pipeline in this section begins running perpendicular to a steep upslope (MP 164.6 to MP 164.75), runs across three rounded peaks and follows the crest of the ridge between the peaks. From MP 165.0 to MP 165.15, the route runs normal to a moderately steep downslope with a gully at the bottom.

The field report noted the soils in this area as silty clayey sand with scattered sandstone cobbles. The field report also noted that the pipeline crosses two significant gullies located near MP 164.93 and MP 165.15. The NRCS soil type is this section is silt loam from Soil Group C.

Water bars in conjunction with trench breakers and drains will be installed in the steeper downhill sections of the right-of-way.

- **MVP-LMP-MO-27 (MP 182.4 to 182.8):**

The pipeline in this area runs along the toe of a steep side slope then crosses Slate Run Creek, a local road, and a cleared transmission right-of-way, and State Route 122 between MP 182.4 to 182.8. The area traverses grassed clearings interrupted by dense vegetation of trees and shrubs.

Exposed bedrock (sandstone/siltstone outcrop) was observed in the field down gradient from the pipeline corridor along State Route 122. No signs of movement were observed along the cleared area but signs of gravitropism were noted during the field report on the well-vegetated steep slope up gradient of the corridor. Historical imagery shows movement within the past twenty years, but no slumps were noticeable during the field investigation. The soils in this section are silt loam according to the NRCS classification and of Soil Group D.

Water bars in conjunction with trench breakers and drains will be installed superjacent to State Route 122.

- **MVP-LMP-GI-28 (MP 197.4 to 197.6 - Jefferson National Forest)**:

The pipeline in this area runs across a moderately sloped knob before following a moderately steep ridgeline downgradient. The adjacent side slopes are steep. The pipeline parallels Mystery Ridge Road in this area.

The field report noted that slopes were mostly silty sand with sandstone cobbles and boulders scattered throughout, and the soil type in the area was defined as Lily-Bailegap Complex or Nolichucky Very Stony Sandy Loam (NRCS Hydrologic Soil Group B). Some of the side slopes off the ridge were observed to have minor signs of gravitropism. Water bars in conjunction with trench breakers will be installed in the steeper downhill sections of the right-of-way and transverse trench drains will be installed throughout the sidehill portion of the alignment.

- **MVP-LMP-GI-29 (MP 198.4 to 199.1 - Jefferson National Forest)**:

The pipeline in this area runs along moderate slopes thoroughly vegetated by grasses and used as a cow pasture from MP 198.4 to 198.8. The pipeline then crosses through dense forest and cleared pasture while crossing a smaller two-track road and two streams. The intermittent stream near MP 198.83 has very steep slopes with little to no vegetative cover on the forest floor. The soil is a very loose organic soil with active surficial erosion across the slope. No failures were observed during the field visit. The corridor intersects a perennial stream near MP 198.93 with moderate slopes and dense vegetation. From this stream the corridor traverses a moderately steep sidehill to a broad, relatively flat ridge.

The soils in the area were noted as Nolichucky Loam (NRC Hydrologic Soil Group B). Overall the slopes are well vegetated with no signs of mass movement except for the steep short slopes leading to the stream near MP 198.93.

In areas where the pipeline crosses the intermittent streams, the grade will be restored to original contours to facilitate drainage. Water bars in conjunction with trench breakers and drains will be installed in the steeper downhill sections of the right-of-way.

- **MVP-LMP-GI-30 (MP 204.4 to 204.8):**

The pipeline in this area runs diagonally upslope from MP 204.4 to MP 204.6, then transitions to upslope on a broad ridge to MP 204.7. The slopes along this section vary between 30% and 45%. This section parallels an existing cleared right-of-way for transmission lines. A gully near MP 204.6 is indicated on the topographic mapping and was confirmed in the field.

The site is mostly wooded with little underbrush, except in areas near the existing overhead lines where dense briars were encountered. Some evidence of gravitropism was observed. Numerous natural drains were observed at the site, in addition to the previously discussed gully, which has been delineated as a stream. Near MP 205.5, the right-of-way approaches an existing dirt road. NRCS classifies soil in this region as silt loam (NRCS Hydrologic Soil Group C) or Carbo-Rock outcrop complex (NRCS Hydrologic Soil Group D).

Where the right-of-way crosses the stream and natural drains, the grade will be restored to facilitate drainage. Any seeps and springs encountered in the excavation will be provided with drains. Water bars in conjunction with trench breakers and drains will be installed in the steeper downhill sections of the right-of-way.

- **MVP-LMP-GI-31 (MP 211.55 to 211.8):**

The pipeline in this area runs across an existing access drive and alongside moderate slopes just south of a crest before heading downslope between MP 211.55 and MP 211.8. The primary area of concern falls between MP 211.55 and MP 211.7 where the pipeline right-of-way comes within approximately 15 feet of a nearly vertical slope. US Route 460 is located directly below this steep slope. The remainder of the area of concern crosses drainages with side slopes ranging from 30% to 47%.

Historical imagery and site reconnaissance show no signs of landslide movement or slope instability. Soils in this area were classified as Carbo-Rock outcrop complex (NRCS Hydrologic Soil Group D) or Gilpin silty loam (NRCS Hydrologic Soil Group C).

Water bars in conjunction with trench breakers and drains will be installed in the steeper downhill section of the right-of-way. Where practical, the pipe trench will be located in bedrock to protect the pipe from shallow soil movements. A transverse trench drain will be installed at the low point near MP 211.65.

- **MVP-LMP-MN-32 (MP 219.6 to 220.9 - Jefferson National Forest):**

From MP 219.6 to MP 219.8, the pipeline corridor follows a generally flat profile along the toe of a slope, then swings south and climbs a steep ridge to MP 220.7. The section of pipeline running up the ridge has an average slope of 30% with side slopes ranging from 40% to 80% downslope to drainage ways. From MP 220.65 to 220.95, the pipeline corridor follows relatively flat or gently up sloping terrain with a gravel road crossing at MP 220.7.

This section was mostly vegetated by trees and shrubs but has occasional sandstone outcrops along the ridgeline. The topsoil was thin and underlying soil was gravelly with gravels composed of fragments of sandstone. Drainage areas from the ridge drain west into Craig Creek. The soil was classified as either Berks and Weikert or Berks and Weikert very stony (NRCS Hydrologic Soil Group B).

Due to the relatively shallow depth of bedrock in this area (approximately 2.75 feet bgs), it is anticipated that the pipe will be installed/embedded within the bedrock from MP 220 to the end of this area of concern. Water bars in conjunction with trench breakers and drains will be installed in the steeper downhill sections of the right-of-way.

Refer to *Site-Specific Design of Stabilization Measures in Selected High-Hazard Portions of the Route of the Proposed Mountain Valley Pipeline Project in the Jefferson National Forest*, JNF Priority Site #6 for more information.

- **MVP-LMP-MN-33 (MP 220.6 to 220.7 – MVP Route 4.0.0)**:

The pipeline in this area runs down the crest of a broad ridge between MP 220.5 to MP 220.65 (MVP Route 4.0.0), then turns 90-degrees down at a slope of approximately 30% for 150 feet before

the pipeline corridor crosses a drainage way near MP 220.66 (MVP Route 4.0.0). The primary area of concern is from MP 220.6 to MP 220.7 (MVP Route 4.0.0). Two additional significant drainage crossings were encountered at MP 220.8 and MP 220.98 (MVP Route 4.0.0), which have been delineated as streams

No field survey or report was completed for this area due to landowner restrictions, but soils in this region are classified as either Berks-Weikert Complex or Berks and Weikert Soils (NRCS hydrologic Soil Group B).

In areas where the pipeline crosses gullies and natural drains, the grade will be restored to original contours to facilitate drainage. Rock armoring or ACB will be utilized to minimize erosion across the pipeline right-of-way at gullies not delineated as streams. A sidehill low-point drain will be installed in the trench at the drainage crossings.

- **MVP-LMP-MN-34 (MP 221.8 to 221.9 -MVP Route 4.0.0):**

The pipeline in this area runs along relatively flat terrain but, while avoiding a substation to the south, cuts through a knoll for a short 400-foot section between MP 221.8 to MP 221.9 (MVP Route 4.0.0).

The area is located at the edge of a pasture and a wooded area adjacent to an existing powerline right-of-way. It does not appear that construction will impact the slope subjacent to the substation. During the field visit, a sinkhole was observed between the edge of the proposed right-of-way and the substation. Soils in this area were classified as either Frederick and Vertrees gravelly silt loam or Duffield-Ernest Complex (NRCS Hydrologic Soil Group B).

No landslide mitigation measures are required in this area and the sinkhole was delineated in MVP's karst study. This area will no longer affect the pipeline alignment following acceptance of the Mount Tabor Alternative.

- **MVP-LMP-MN-35 (MP 229.2 to 229.3):**

The pipeline in this section runs adjacent to and crosses a power line right-of-way and intermittent stream. After crossing the stream near MP 229.3, the pipeline follows a slight sidehill trajectory above the stream to the power line right-of-way. The forest floor is mostly bare with leaves and some small shrubs, but the area is forested. Soils in the area correspond to NRCS Hydrologic Soil Class A and B and were observed to be very stony.

No landslide mitigation measures are recommended in this area.

- **MVP-LMP-FR-36 (MP 261.2 to 261.2):**

The pipeline in this area crosses State Route 697 and then turns downslope before crossing moderately steep side slopes for approximately 600 feet. The area of concern is in the vicinity of MP 261.2. Houses are located within 200 feet or less of the pipeline corridor but both are uphill from the corridor.

The area is gently sloping with a dense forest of young trees with sparse low-growing vegetation. No evidence of prior slope movement was observed. Soils in the area were classified as Clifford-Hickoryknob Complex (NRCS Hydrologic Soil Group B).

No landslide mitigation measures are required in this area.

- **MVP-LMP-FR-37 (MP 263.9 to 264.0 -MVP Route 4.0.0):**

The pipeline in this section runs across two existing gravel roads and a cleared right-of-way for transmission lines before turning across a moderate side slope just south of a substation. The primary concern is the steep side slope adjacent to the substation between MP 264.05 to MP 264.1 (MVP Route 4.0.0).

The right-of-way is brush- and tree-covered in this vicinity. Several boulders were visible at the ground surface, but soil along the right-of-way may have been disturbed during construction of the substation or associated power lines. Just south of the substation, an existing drainage culvert runs downhill to a catch basin on the north side of Energy Boulevard. It appears that this culvert drains to the south side of Energy Boulevard. This drainage should be restored following pipeline construction. The soil type in this section is Clifford fine sandy loam of NRCS soil group B.

No landslide mitigation measures are required in this area.

This area will no longer affect the pipeline alignment following acceptance of the Blackwater Alternative.

9.0 ADDITIONAL AREAS OF CONCERN

9.1 Peters Mountain, Sinking Creek Mountain, Brush Mountain, and Giles County Seismic Zone

Potential landslide hazards in the areas of the Giles County Seismic Zone (GCSZ), Peters Mountain, Sinking Creek Mountain and Brush Mountain in southern West Virginia and Southwestern Virginia along the proposed route for the Mountain Valley Pipeline are summarized below. It should be noted that the GCSZ is not a specifically mapped geographic area, but corresponds to a generalized area that is relatively seismically active.

Landslide, debris flow, debris avalanche, earthflow and creep, rockfall (Wieczorek and Snyder, 2009), and rock slump and rock block slides (Schultz and Southworth;1989) are the general categories of mass wasting hazards that may be observed in southern West Virginia and southwestern Virginia. Landslides, flow, avalanche and creep are characteristic of failure in unconsolidated overburden or highly weathered shallow bedrock.

Rock block failure involves gravity-induced movement of massive and intact blocks of bedrock. Schultz and Southworth (1989) identify rock slumps and rock block slides as a specific mass wasting hazard somewhat unique to Peters Mountain, Sinking Creek Mountain and Brush Mountain.

According to Schultz and Southworth (1987, 1989): *Rock block slides tend to occur on the southeast slopes of anticlinal folds composed of sandstone, siltstone and shale. Where these folded beds dip steeply (45 degrees or more) rock slides are relatively small and confined to the uppermost parts of the slope. Where dips are less than 30 degrees, slides show more movement and are areally extensive. Most of the rock block slides are relict features from the Pleistocene Epoch. Dip-slope rock block failure occurs over an extended period of time, and no evidence of recent movement in these areas have been found.*

Trigger events for rock block failure are thought to be primarily associated with pore pressure effects from sustained long-duration or short duration intense precipitation events (Schultz and Southworth, 1987, 1989;

Wieczorek and Snyder, 2009). Some researchers postulate that seismic shaking may trigger slope failure, but no direct evidence is available to support this suggestion. D.G. Honegger Consulting (2015) presents an analysis and recommendations for mitigating seismic-induced risks to MVP.

Rock block failure progresses from an initial stage of downslope sagging and bulging to downslope slumping to brittle fracture along lateral break-away scarps (Schultz and Southworth, 1987). This typified behavior presents an opportunity to establish a monitoring program along the southeast slopes of Peters Mountain, Sinking Creek Mountain and Brush Mountain to provide advanced warning of potential rock block failure, as summarized below.

Mountain Valley Pipeline will monitor for potential rock block slides on the southeast slopes of Peters Mountain, Sinking Creek Mountain and Brush Mountain. As discussed above, rock block slides in these areas of concern are relict features, and if further sliding or slumping is occurring it is a very slow process. The pace of such failures is conducive to establishing a monitoring program and if future observations dictate, establishing an evaluation and mitigation program for the pipeline in areas observed to be at risk. On a five-year basis, MVP will conduct aerial inspection of these slopes with LIDAR, and evaluate the slope characteristics for notable bulging or bowing, and other observations of possible slope movement. If this monitoring program suggests evidence for rock block slumping or incipient failure, Mountain Valley will deploy a field inspection team to the area of concern and establish a mitigation program commensurate with the results of an incipient slope failure study.

It is noted that there is no direct evidence that seismic shaking presents significant risk for acute or catastrophic rock block slides in the relatively seismically active southern West Virginia and southwestern Virginia. This further supports the efficacy of a surveillance program described above.

9.2 Debris Flow Potential along Kimballton Branch

Debris flows are a type of mass movement comprised of soil and rock moving along a shallow sliding surface within soil or weathered, foliated and jointed rock materials. Debris flows are often associated with steep gullies and may be triggered by significant precipitation events.

The pipeline crosses the headwaters of Kimballton Branch (which flows to Big Stoney Creek) between MP 195.7 and 195.8. During construction, an engineering geologist or geotechnical engineer familiar with debris flows will evaluate the area and will be present during pipeline construction to observe the trench and earth materials. Based on the results of these observations, MVP will determine if minor adjustments to the proposed alignment are warranted to mitigate the potential for a debris flow or avoid an existing debris flow. If this area appears to be prone to debris flow recurrence but an alignment adjustment is not practical, mitigation measures, which may include drains and soil reinforcement or other measures depending on subsurface conditions encountered, will be implemented.

10.0 REFERENCES

1. Resource Report 6 – Geologic Resources, Mountain Valley Pipeline Project, Docket No. CP16-10-000, October 2015.
2. Resource Report 1 – General Project Description, Mountain Valley Pipeline Project, Docket No. CP16-10-000, October 2015.
3. Washington State Department of Transportation (WSDOT), Landslide Mitigation Action Plan, Final Report, 2014.

4. Slope Stability and Stabilization Methods, L. Abramson, T.S. Lee, S. Sharma & G. Boyce, 2nd Edition, 2002.

5. Windolph, J.F., Jr. (1987) Geologic map of the Big Chimney quadrangle, Kanawha County, West Virginia. U.S. Geologic Survey: Geologic Quadrangle Map GQ-1612. 1:24,000-scale map.

6. U.S. Geologic Survey, Conemaugh Group. http://mrdata.usgs.gov/geology/state/sgmc-unit.php?unit=WVPAc%3B0 Accessed September 29, 2016

7. Windolph, J.F., Jr. (1987) Geologic map of the Big Chimney quadrangle, Kanawha County, West Virginia. U.S. Geologic Survey: Geologic Quadrangle Map GQ-1612. 1:24,000-scale map.

8. U.S. Geologic Survey, Monongahela Group. https://mrdata.usgs.gov/geology/state/sgmc-unit.php?unit=WVPAm%3B0 Accessed September 29, 2016

9. Fedorko, N., Skema, V. (2011) Stratigraphy of the Dunkard Group in West Virginia and Pennsylvania. Guidebook for the 76th Annual Field Conference of Pennsylvania Geologists: Geology of the Pennsylvanian-Permian in the Dunkard Basin. Pittsburgh, Pennsylvania.

10. U.S. Geologic Survey, Dunkard Group. http://mrdata.usgs.gov/geology/state/sgmc-unit.php?unit=WVPd%3B0 Accessed September 29, 2016

11. Delano, HL. (2011) A Brief Overview of Landslides in Greene and Southern Washington Counties, Pennsylvania and Adjacent Areas. Guidebook for the 76th Annual Field Conference of Pennsylvania Geologists: Geology of the Pennsylvanian-Permian in the Dunkard Basin. Pittsburgh, Pennsylvania.

12. Windolph, J.F., Jr. (1987) Geologic map of the Big Chimney quadrangle, Kanawha County, West Virginia. U.S. Geologic Survey: Geologic Quadrangle Map GQ-1612. 1:24,000-scale map.

13. U.S. Geologic Survey, Mauch Chunk Group. http://mrdata.usgs.gov/geology/state/sgmc-unit.php?unit=WVMmc%3B0 Accessed September 29, 2016

14. U.S. Geologic Survey, Bluestone and Princeton Formations. http://mrdata.usgs.gov/geology/state/sgmc-unit.php?unit=WVMbp%3B0 Accessed September 29, 2016

15. Wilpolt, RH., Marden DW. (1959) Geology and Oil and Gas Possibilities of Upper Mississippian Rocks of Southwestern Virginia, Southern West Virginia and Eastern Kentucky. Division of Geology of the Virginia Department of Conservation and Development: Geological Survey Bulletin 1072-K. Hansen, MC. (1995) Landslides in Ohio. Ohio Department of Natural Resources, Division of Geological Survey: GeoFacts, No. 8.

16. Scheffel, ER. (1920) “Slides” in the Conemaugh Formation near Morgantown, West Virginia. The Journal of Geology: Vol. 28, No. 4, pp. 340-355.

17. USDA Forest Service. 2009. Lower Williams Vegetation, Final Environmental Impact Statement, Monongahela National Forest. U.S. Dept. of Agriculture, Forest Service, Eastern Region.

18. D.G. Honegger Consulting (2015). Review of Potential Seismic Hazards Along the Proposed Route of the Mountain Valley Pipeline. Letter dated September 19, 2015 from D.G. Honegger Consulting to Mountain Valley Pipeline LLC.

19. Schultz, A. P., and Southworth, C. S. (1987). Landslides of Eastern North America. Papers presented at the Southeastern Section Geological Society of America Symposium, March 26, 1987. U.S. Geological Survey Circular 1008.

20. Schultz, A. P., and Southworth, C. S. (1989). Large Bedrock Landslides of the Appalachian Valley and Ridge Province of Eastern North America. Geological Society of America Special Paper 236, p 57-74.

21. Wieczorek, G. F. and Snyder, J. B. (2009). Monitoring Slope Movements. in Young, R., and Norby, L., Geological Monitoring: Boulder, Colorado, Geological Society of America, p. 245-271.

APPENDIX

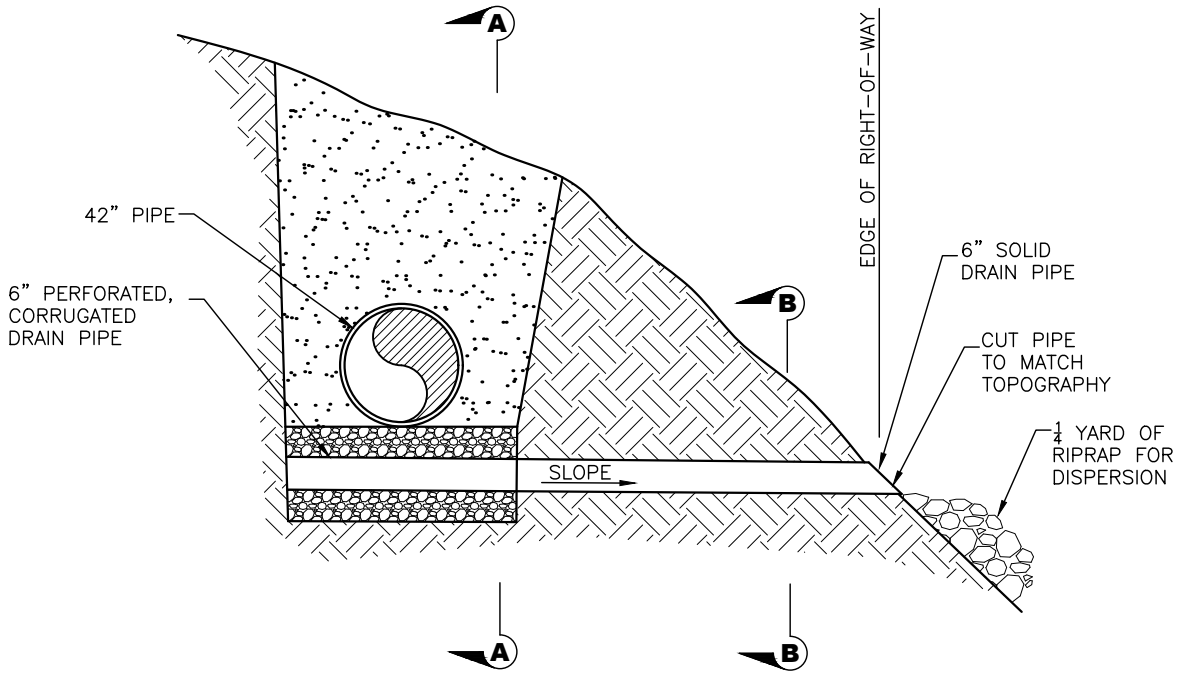

MAINLINE CROSS SECTION

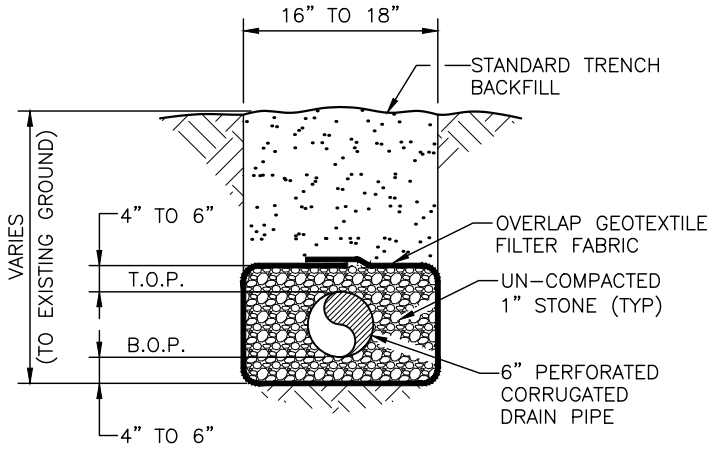

SECTION A–A

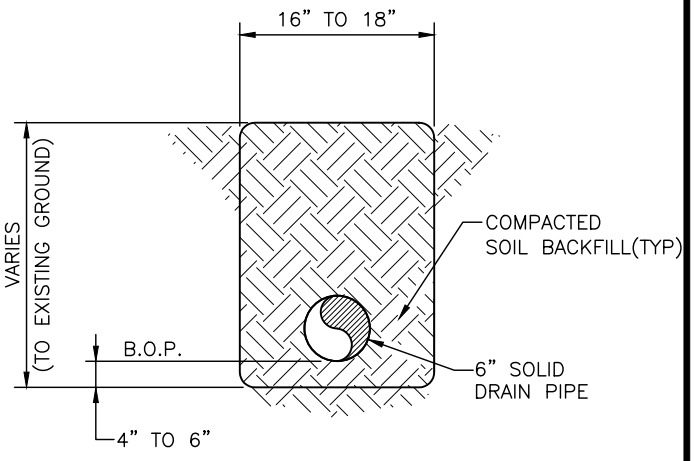

SECTION B–B

NOTES

1. LOW POINT DITCH DRAINS SHALL BE INSTALLED AT LOCATIONS SPECIFIED IN THE APPROVED EROSION & SEDIMENTATION CONTROL PLAN, AND AS DIRECTED BY THE ENVIRONMENTAL INSPECTOR.
2. FILL STONE SHOULD BE 1" AGGREGATE WITHOUT FINES, CRUSHER RUN WITHOUT FINES, OR EQUIVALENT.
3. DRAIN PIPE TO BE CONNECTED USING STANDARD PIPE COLLARS.

THIS TYPICAL CONSTRUCTION DETAIL IS INTENDED TO PROVIDE GUIDANCE TO THE PIPELINE CONTRACTOR. THE ACTUAL CONSTRUCTION TECHNIQUES MAY DIFFER DEPENDING UPON FIELD CONDITIONS AND OR REGULATORY REQUIREMENTS.

DRAWN	JIL	DATE	10/6/2016
CHECKED	MMF	DATE	10/6/2016
APP'D	XXX	DATE	10/6/2016
SCALE	N.T.S.	SHEET	1 OF 1
JOB NO.			
PROJECT ID: PXXXX			

Mountain Valley PIPELINE

DESIGN ENGINEERING

TYPICAL CONSTRUCTION DETAIL

SIDEHILL LOW-POINT DRAIN TYPICAL

DRAWING NO. MVP-24

REV. 0

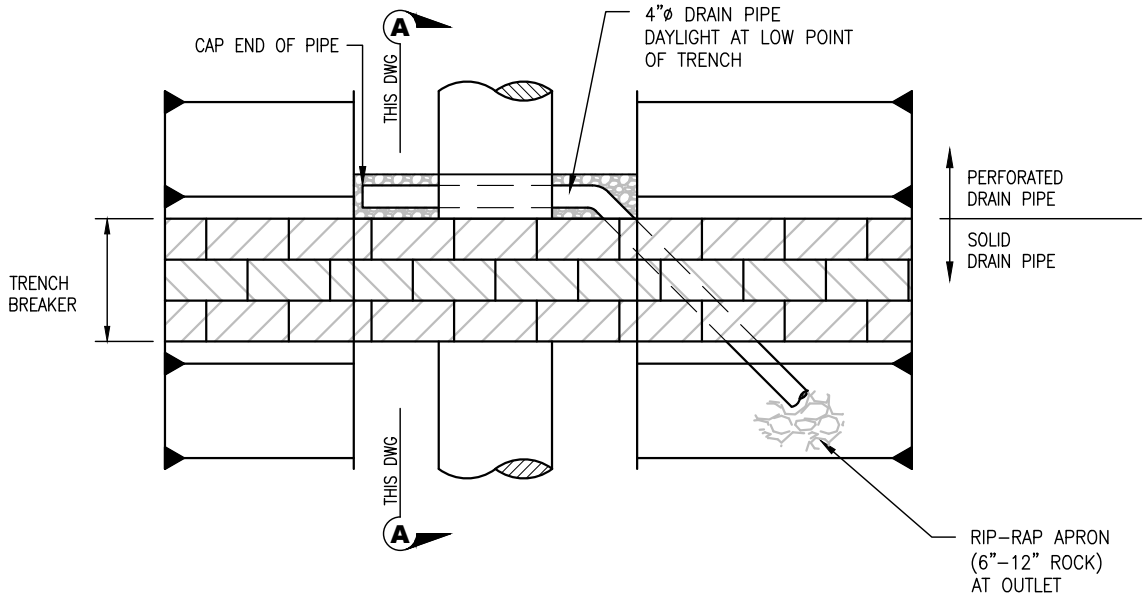

PLAN
SCALE: NOT TO SCALE

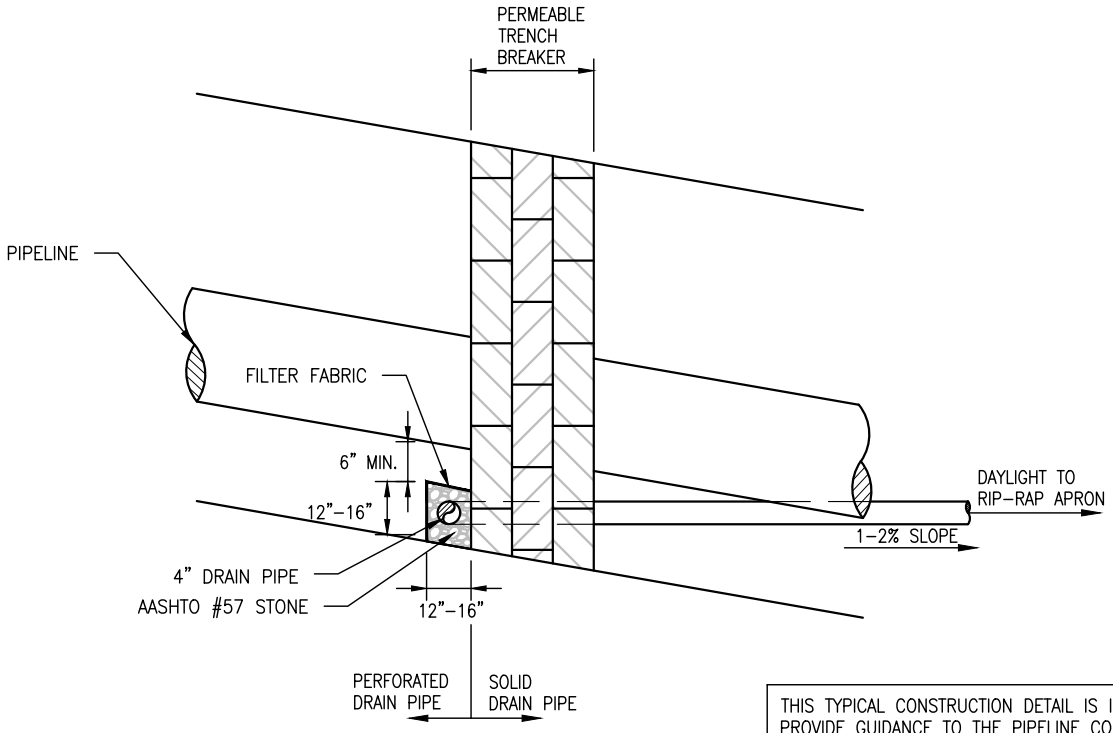

SECTION A-A
SCALE: NOT TO SCALE

THIS TYPICAL CONSTRUCTION DETAIL IS INTENDED TO PROVIDE GUIDANCE TO THE PIPELINE CONTRACTOR. THE ACTUAL CONSTRUCTION TECHNIQUES MAY DIFFER DEPENDING UPON FIELD CONDITIONS AND OR REGULATORY REQUIREMENTS.

DRAWN	TDD	DATE	2/03/2016
CHECKED	MMF	DATE	2/03/2016
APP'D		DATE	
SCALE	N.T.S.	SHEET	1 OF 1
JOB NO.			
PROJECT ID:			
PXXXX			

Mountain Valley PIPELINE

DESIGN ENGINEERING

TYPICAL CONSTRUCTION DETAIL

TRENCH BREAKER DAYLIGHT DRAIN

DRAWING NO. MVP-35

REV. 0

Plotted by: Gildernew, Edward on: February 16, 2017 - 7:39 AM

File Path: C:\Vault Working\Systems\MVP\H-600\H-600 Bid Package\Drawing Files\Design Files\Mechanical\Construction Typicals\MVP-35.dwg

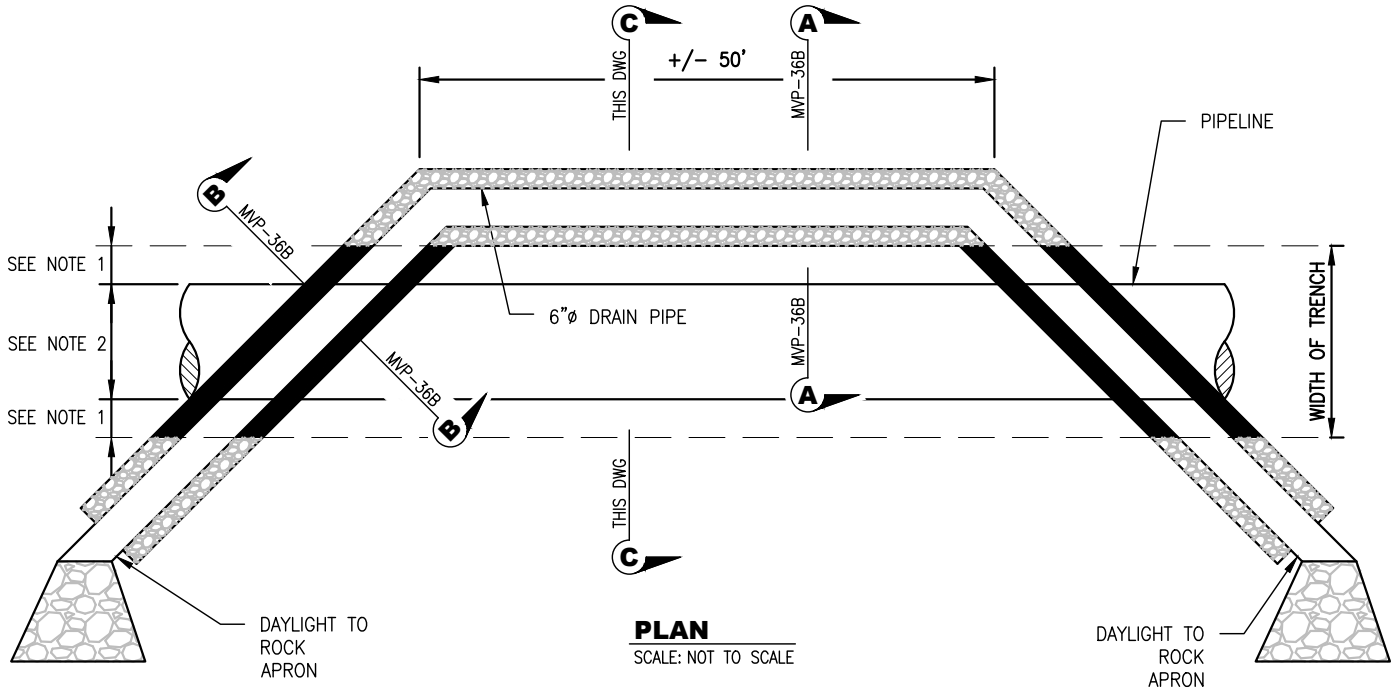

PLAN
SCALE: NOT TO SCALE

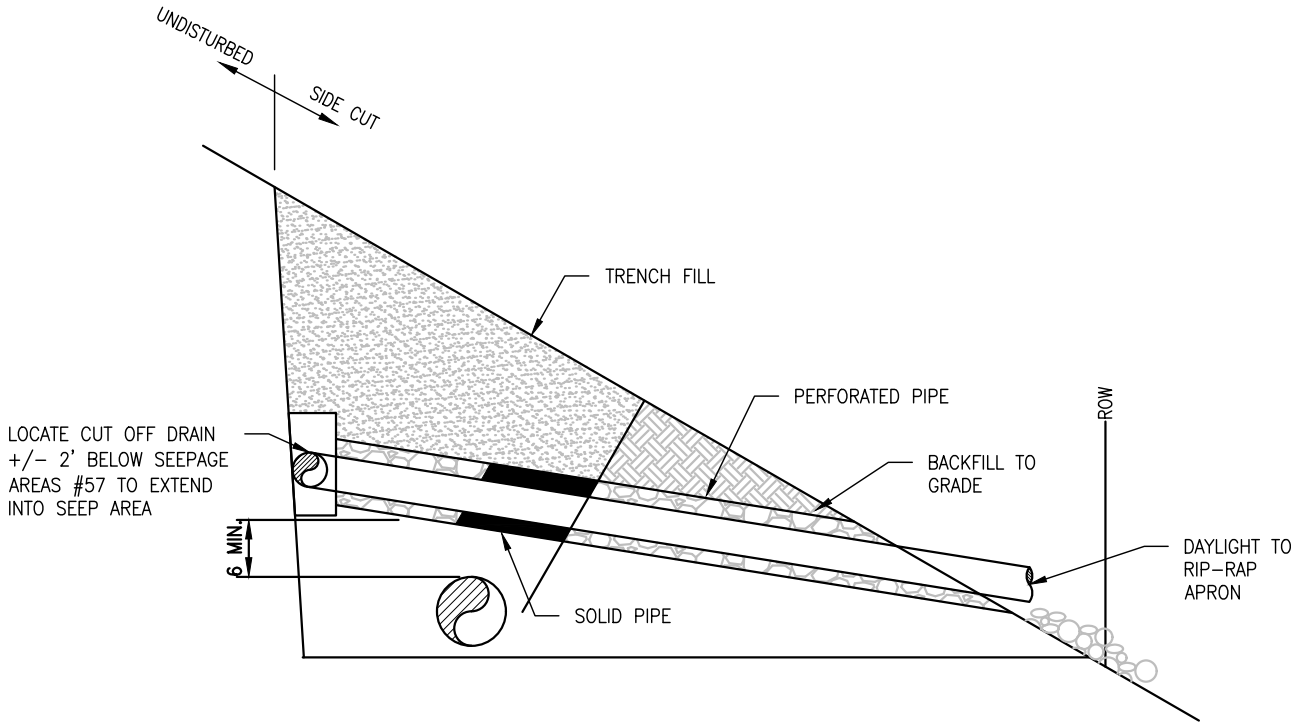

SECTION C-C
SCALE: NOT TO SCALE

NOTES:
1. PERFORATED PIPE SURROUNDED BY #57 STONE.
2. SOLID PIPE (IN TRENCH) SURROUNDED BY TRENCH BACKFILL.

THIS TYPICAL CONSTRUCTION DETAIL IS INTENDED TO PROVIDE GUIDANCE TO THE PIPELINE CONTRACTOR. THE ACTUAL CONSTRUCTION TECHNIQUES MAY DIFFER DEPENDING UPON FIELD CONDITIONS AND OR REGULATORY REQUIREMENTS.

DRAWN	TDD	DATE	2/03/2016
CHECKED	MMF	DATE	2/03/2016
APP'D		DATE	
SCALE	N.T.S.	SHEET	1 OF 2
JOB NO.			
PROJECT ID: PXXXX			

Mountain Valley PIPELINE

DESIGN ENGINEERING

TYPICAL CONSTRUCTION DETAIL

CUTOFF DRAIN–SIDEHILL

DRAWING NO. MVP–36A

REV. 0

Plotted by: Gildernew, Edward on: February 16, 2017 - 7:39 AM

File Path: C:\Vault Working\Systems\MVP\H-600\H-600 Bid Package\Drawing Files\Design Files\Mechanical\Construction Typicals\MVP-36a.dwg

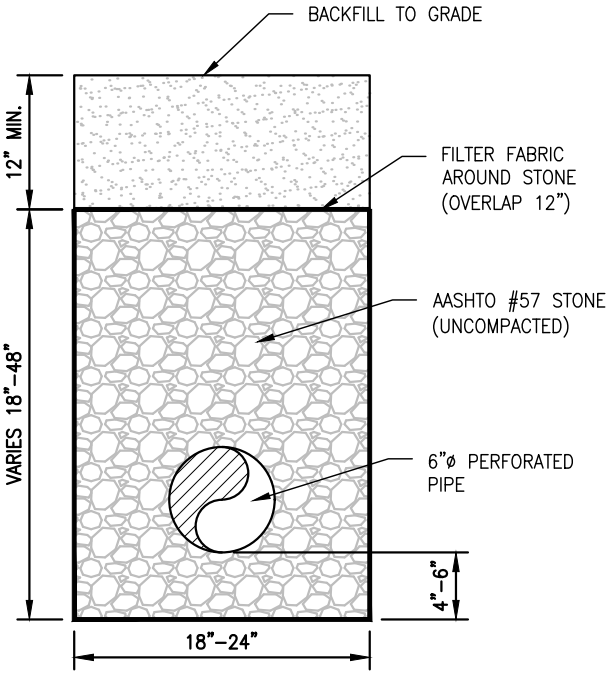

SECTION A-A

SCALE: NOT TO SCALE

FROM MVP–36A

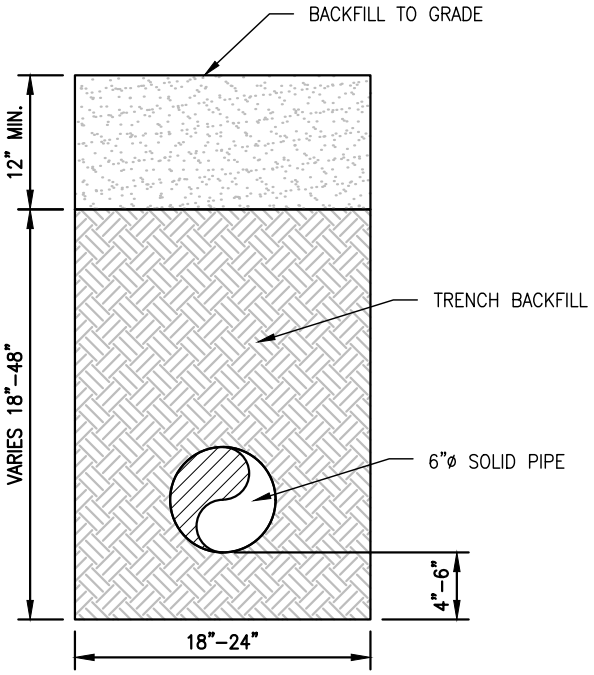

SECTION B-B

SCALE: NOT TO SCALE

FROM MVP–36A

THIS TYPICAL CONSTRUCTION DETAIL IS INTENDED TO PROVIDE GUIDANCE TO THE PIPELINE CONTRACTOR. THE ACTUAL CONSTRUCTION TECHNIQUES MAY DIFFER DEPENDING UPON FIELD CONDITIONS AND OR REGULATORY REQUIREMENTS.

DRAWN	TDD	DATE	2/03/2016
CHECKED	MMF	DATE	2/03/2016
APP'D		DATE	
SCALE	N.T.S.	SHEET	2 OF 2
JOB NO.			
PROJECT ID: PXXXX			

Mountain Valley PIPELINE

DESIGN ENGINEERING

TYPICAL CONSTRUCTION DETAIL

CUTOFF DRAIN–SIDEHILL

DRAWING NO. MVP–36B

REV. 0

Plotted by: Gildernew, Edward on: February 16, 2017 - 7:39 AM

File Path: C:\Vault Working\Systems\MVP\H-600\H-600 Bid Package\Drawing Files\Design Files\Mechanical\Construction Typicals\MVP-36b.dwg

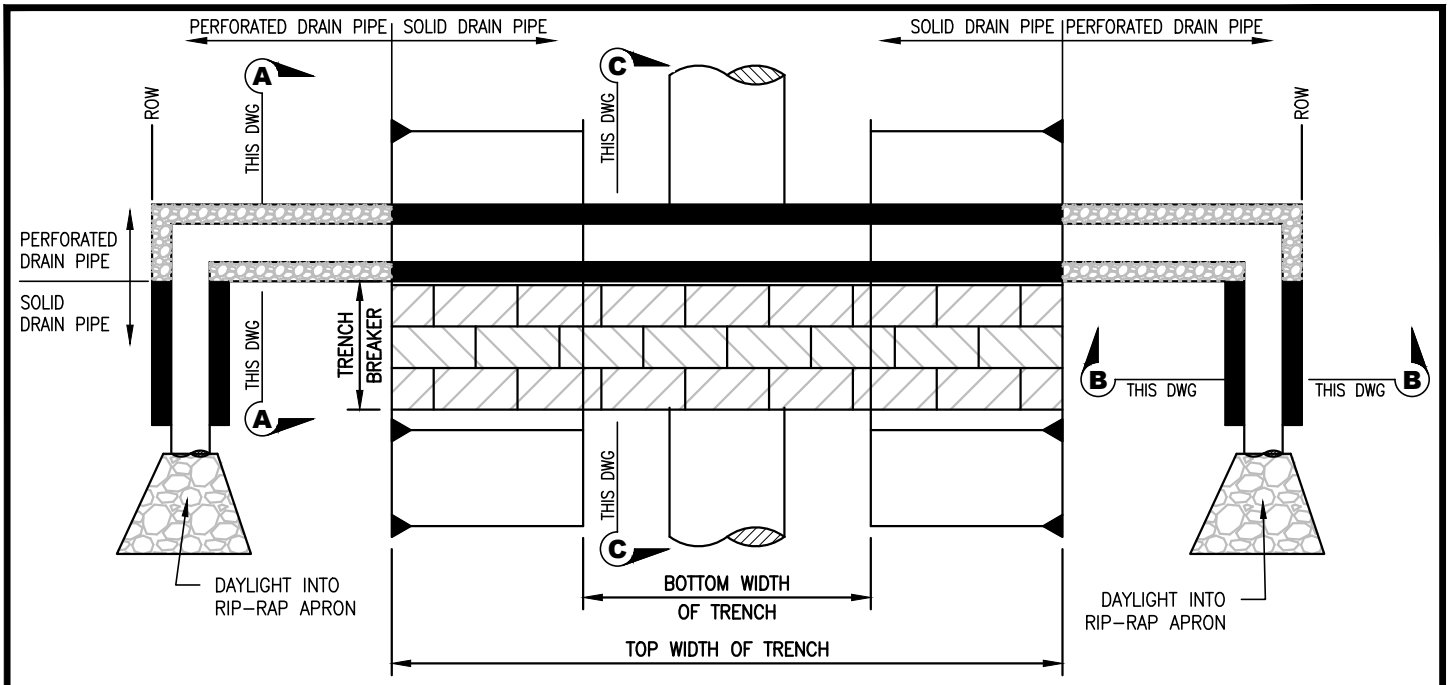

PLAN
SCALE: NOT TO SCALE

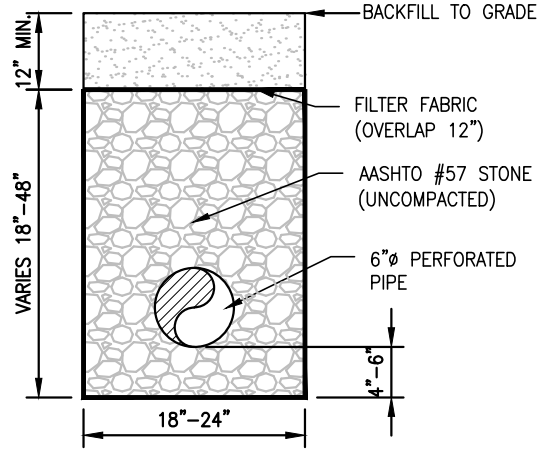

SECTION A-A
SCALE: NOT TO SCALE

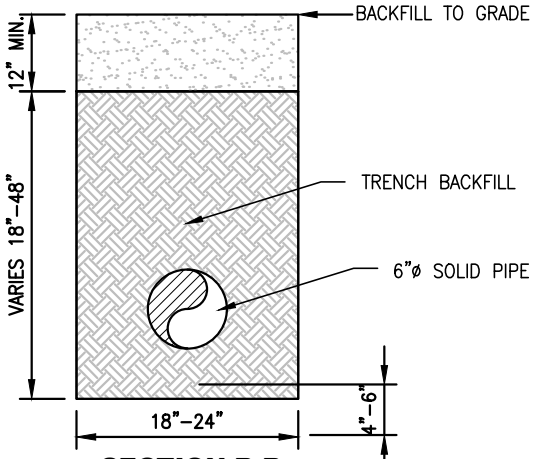

SECTION B-B
SCALE: NOT TO SCALE

NOTES:
1. EACH CUTOFF DRAIN SHALL UTILIZE A TRENCH BREAKER DRAIN (SEE MVP-43A) TO DRAIN THE TRENCH.

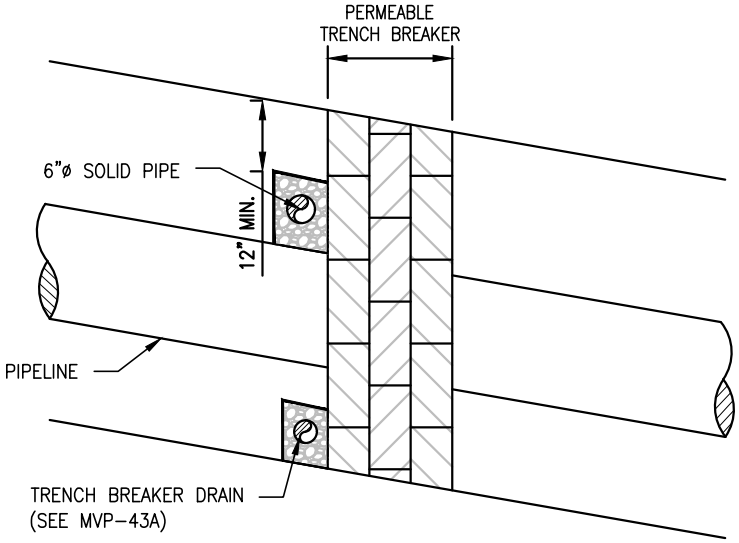

SECTION C-C
SCALE: NOT TO SCALE

THIS TYPICAL CONSTRUCTION DETAIL IS INTENDED TO PROVIDE GUIDANCE TO THE PIPELINE CONTRACTOR. THE ACTUAL CONSTRUCTION TECHNIQUES MAY DIFFER DEPENDING UPON FIELD CONDITIONS AND OR REGULATORY REQUIREMENTS.

DRAWN	TDD	DATE	2/03/2016
CHECKED	MMF	DATE	2/03/2016
APP'D		DATE	
SCALE	N.T.S.	SHEET	1 OF 1
JOB NO.			
PROJECT ID: PXXXX			

Mountain Valley PIPELINE

DESIGN ENGINEERING

TYPICAL CONSTRUCTION DETAIL

CUTOFF DRAIN-PLANAR

DRAWING NO. MVP-37

REV. 0

Plotted by: Gildernew, Edward on: February 17, 2017 - 8:17 AM

File Path: C:\Vault Working\Systems\MVP\H-600\H-600 Bid Package\Drawing Files\Design Files\Mechanical\Construction Typicals\MVP-37.dwg

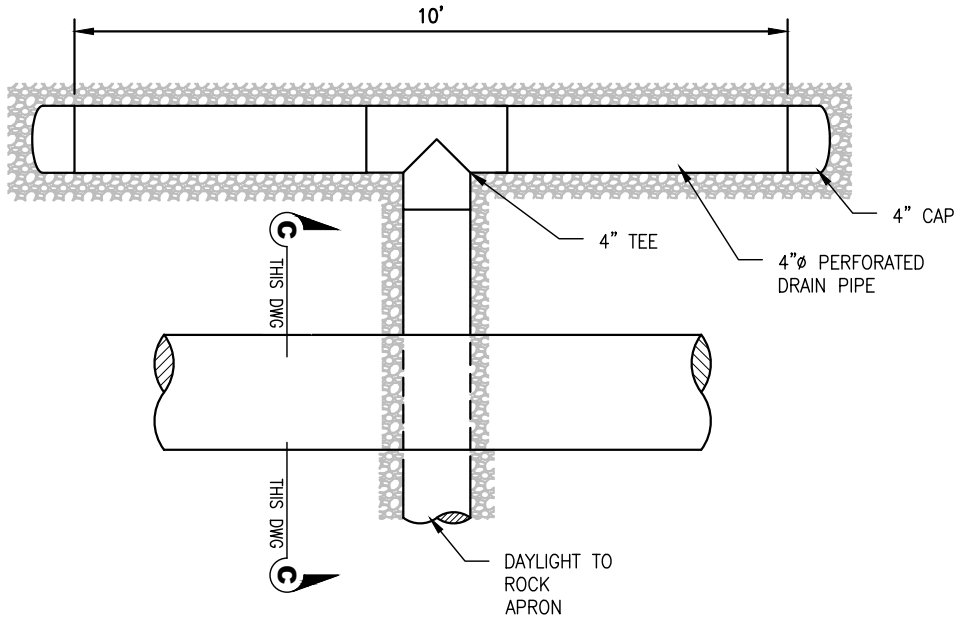

PLAN
SCALE: NOT TO SCALE

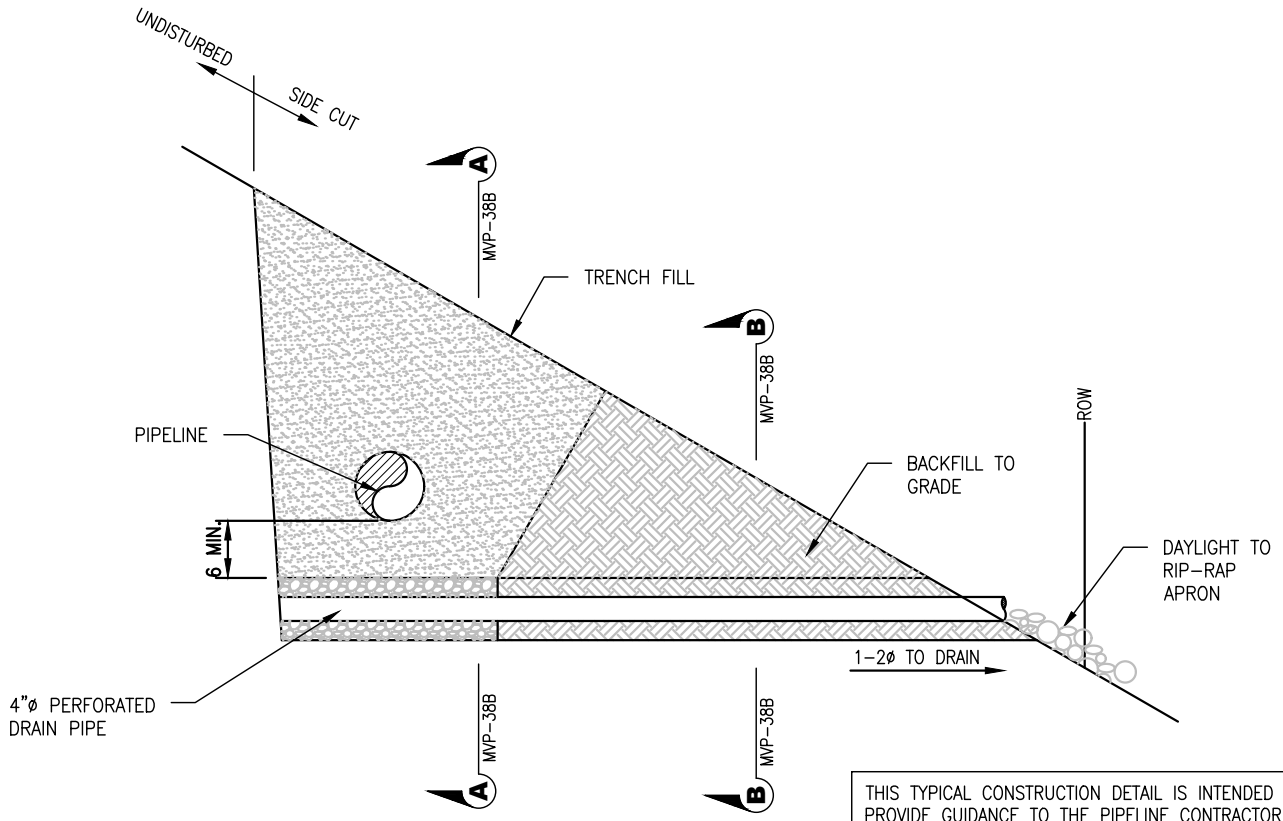

SECTION C-C
SCALE: NOT TO SCALE

THIS TYPICAL CONSTRUCTION DETAIL IS INTENDED TO PROVIDE GUIDANCE TO THE PIPELINE CONTRACTOR. THE ACTUAL CONSTRUCTION TECHNIQUES MAY DIFFER DEPENDING UPON FIELD CONDITIONS AND OR REGULATORY REQUIREMENTS.

DRAWN	TDD	DATE	2/03/2016
CHECKED	MMF	DATE	2/03/2016
APP'D		DATE	
SCALE	N.T.S.	SHEET	1 OF 2
JOB NO.			
PROJECT ID: PXXXX			

Mountain Valley PIPELINE

DESIGN ENGINEERING

TYPICAL CONSTRUCTION DETAIL

TRANSVERSE TRENCH DRAIN

DRAWING NO. MVP-38A

REV. 0

Plotted by: Gildernew, Edward on: February 16, 2017 - 7:39 AM

File Path: C:\Vault Working\Systems\MVP\H-600\H-600 Bid Package\Drawing Files\Design Files\Mechanical\Construction Typicals\MVP-38A.dwg

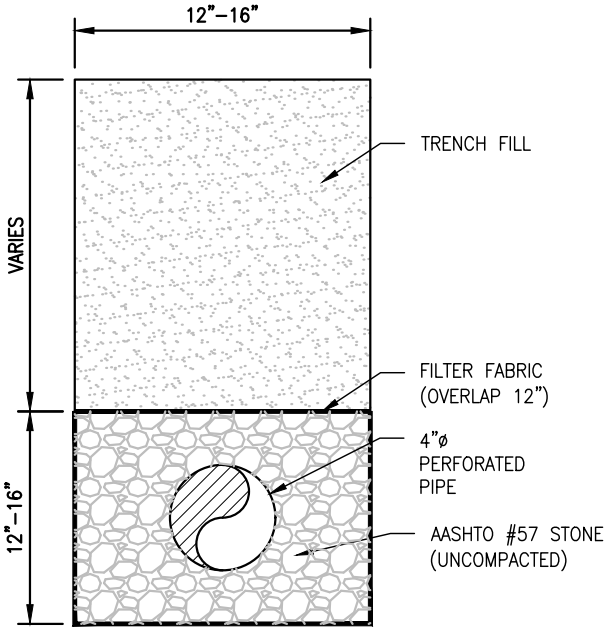

SECTION A-A

SCALE: NOT TO SCALE

FROM MVP–38A

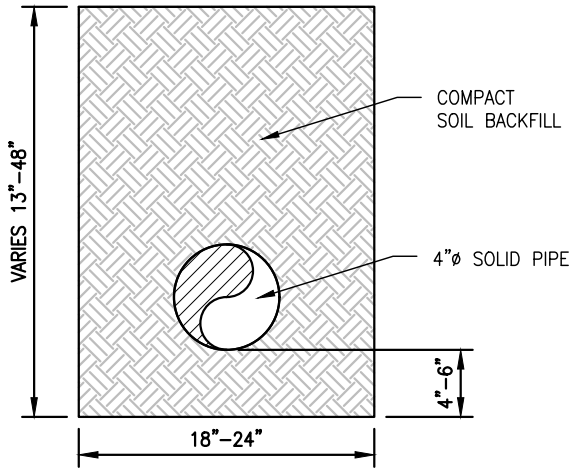

SECTION B-B

SCALE: NOT TO SCALE

FROM MVP–38A

THIS TYPICAL CONSTRUCTION DETAIL IS INTENDED TO PROVIDE GUIDANCE TO THE PIPELINE CONTRACTOR. THE ACTUAL CONSTRUCTION TECHNIQUES MAY DIFFER DEPENDING UPON FIELD CONDITIONS AND OR REGULATORY REQUIREMENTS.

DRAWN	TDD	DATE	2/03/2016
CHECKED	MMF	DATE	2/03/2016
APP'D		DATE	
SCALE	N.T.S.	SHEET	2 OF 2
JOB NO.			
PROJECT ID: PXXXX			

Mountain Valley PIPELINE

DESIGN ENGINEERING

TYPICAL CONSTRUCTION DETAIL

TRANSVERSE TRENCH DRAIN

DRAWING NO. MVP–38B

REV. 0

Plotted by: Gildernew, Edward on: February 16, 2017 - 7:39 AM

File Path: C:\Vault Working\Systems\MVP\H-600\H-600 Bid Package\Drawing Files\Design Files\Mechanical\Construction Typicals\MVP-38B.dwg

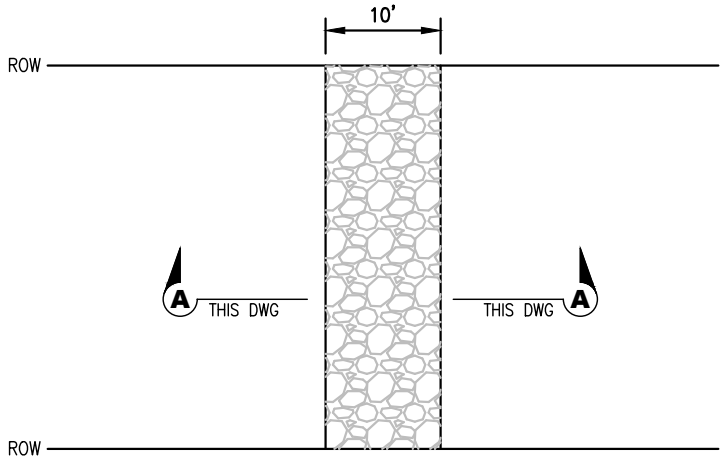

PLAN
SCALE: NOT TO SCALE

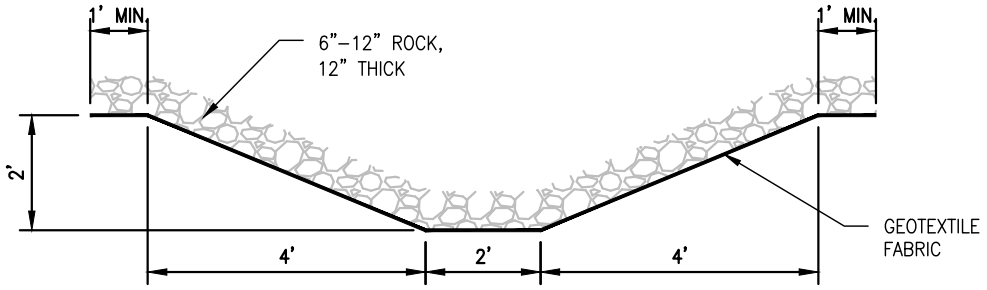

SECTION A-A
SCALE: NOT TO SCALE

THIS TYPICAL CONSTRUCTION DETAIL IS INTENDED TO PROVIDE GUIDANCE TO THE PIPELINE CONTRACTOR. THE ACTUAL CONSTRUCTION TECHNIQUES MAY DIFFER DEPENDING UPON FIELD CONDITIONS AND OR REGULATORY REQUIREMENTS.

DRAWN	TDD	DATE	2/03/2016
CHECKED	MMF	DATE	2/03/2016
APP'D		DATE	
SCALE	N.T.S.	SHEET	1 OF 1
JOB NO.			
PROJECT ID: PXXXX			

Mountain Valley PIPELINE

DESIGN ENGINEERING

TYPICAL CONSTRUCTION DETAIL

ROCK LINED SWALE

DRAWING NO. MVP–39

REV. 0

Plotted by: Gildernew, Edward on: February 16, 2017 - 7:39 AM

File Path: C:\Vault Working\Systems\MVP\H-600\H-600 Bid Package\Drawing Files\Design Files\Mechanical\Construction Typicals\MVP-39.dwg

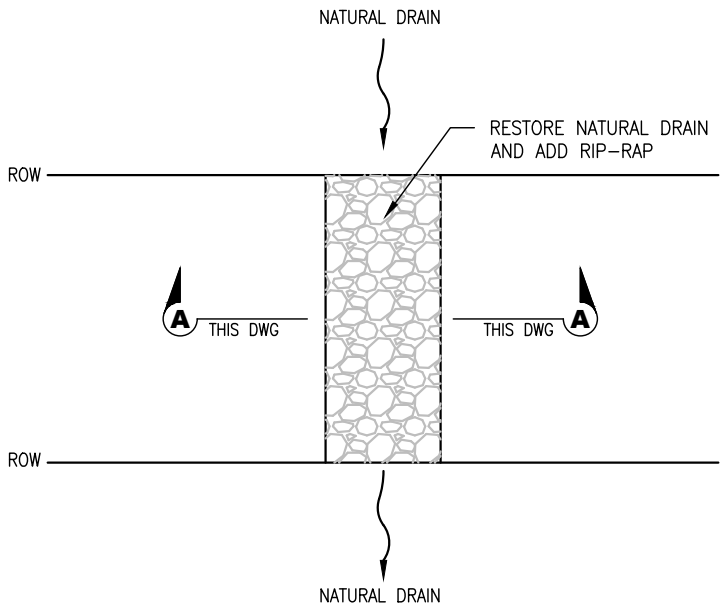

PLAN
SCALE: NOT TO SCALE

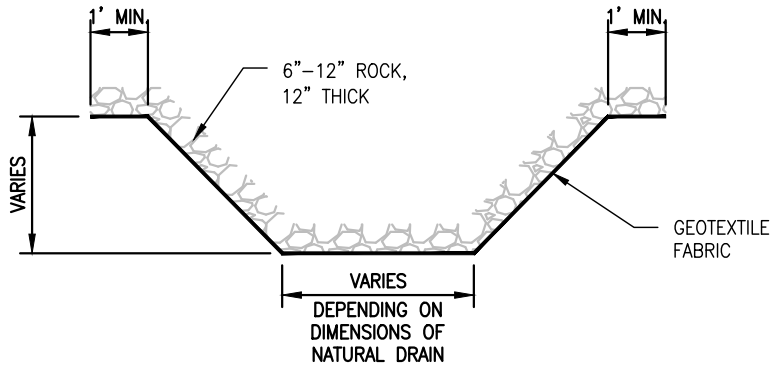

SECTION A-A
SCALE: NOT TO SCALE

THIS TYPICAL CONSTRUCTION DETAIL IS INTENDED TO PROVIDE GUIDANCE TO THE PIPELINE CONTRACTOR. THE ACTUAL CONSTRUCTION TECHNIQUES MAY DIFFER DEPENDING UPON FIELD CONDITIONS AND OR REGULATORY REQUIREMENTS.

DRAWN	TDD	DATE	2/03/2016
CHECKED	MMF	DATE	2/03/2016
APP'D		DATE	
SCALE	N.T.S.	SHEET	1 OF 1
JOB NO.			
PROJECT ID: PXXXX			

Mountain Valley PIPELINE

DESIGN ENGINEERING

TYPICAL CONSTRUCTION DETAIL

RIP-RAP NATURAL DRAIN

DRAWING NO. MVP-40

REV. 0

Plotted by: Gildernew, Edward on: February 16, 2017 - 7:39 AM

File Path: C:\Vault Working\Systems\MVP\H-600\H-600 Bid Package\Drawing Files\Design Files\Mechanical\Construction Typicals\MVP-40.dwg

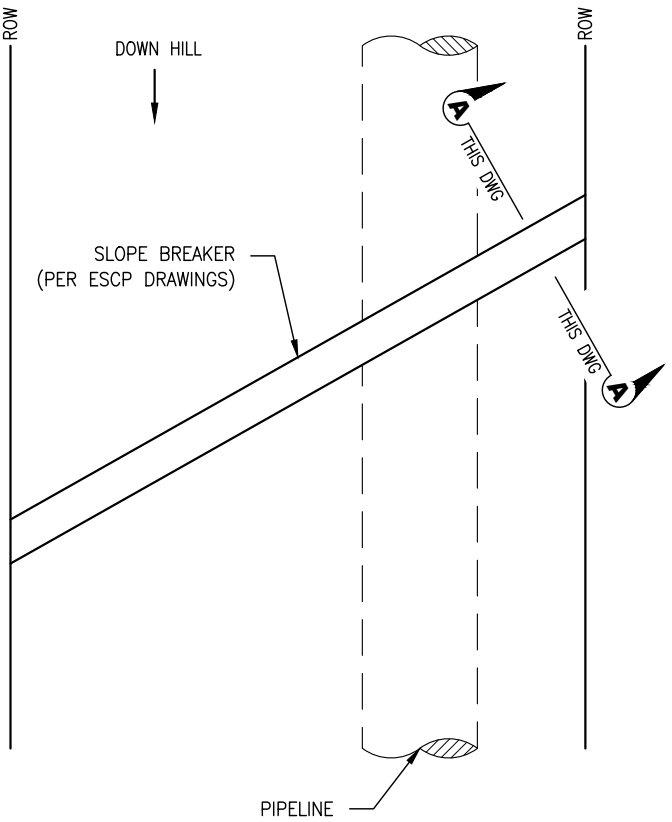

PLAN
SCALE: NOT TO SCALE

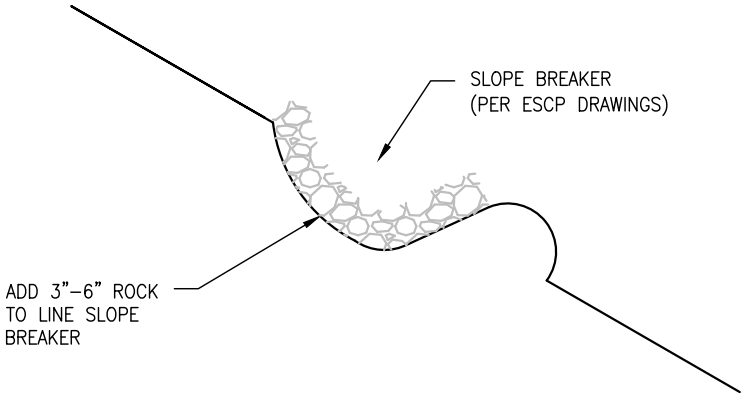

SECTION A-A
SCALE: NOT TO SCALE

THIS TYPICAL CONSTRUCTION DETAIL IS INTENDED TO PROVIDE GUIDANCE TO THE PIPELINE CONTRACTOR. THE ACTUAL CONSTRUCTION TECHNIQUES MAY DIFFER DEPENDING UPON FIELD CONDITIONS AND OR REGULATORY REQUIREMENTS.

DRAWN	TDD	DATE	2/03/2016
CHECKED	MMF	DATE	2/03/2016
APP'D		DATE	
SCALE	N.T.S.	SHEET	1 OF 1
JOB NO.			
PROJECT ID: PXXXX			

Mountain Valley PIPELINE

DESIGN ENGINEERING

TYPICAL CONSTRUCTION DETAIL

RIP–RAP SLOPE BREAKERS

DRAWING NO. MVP–41

REV. 0

Plotted by: Gildernew, Edward on: February 16, 2017 - 7:39 AM

File Path: C:\Vault Working\Systems\MVP\H-600\H-600 Bid Package\Drawing Files\Design Files\Mechanical\Construction Typicals\MVP-41.dwg

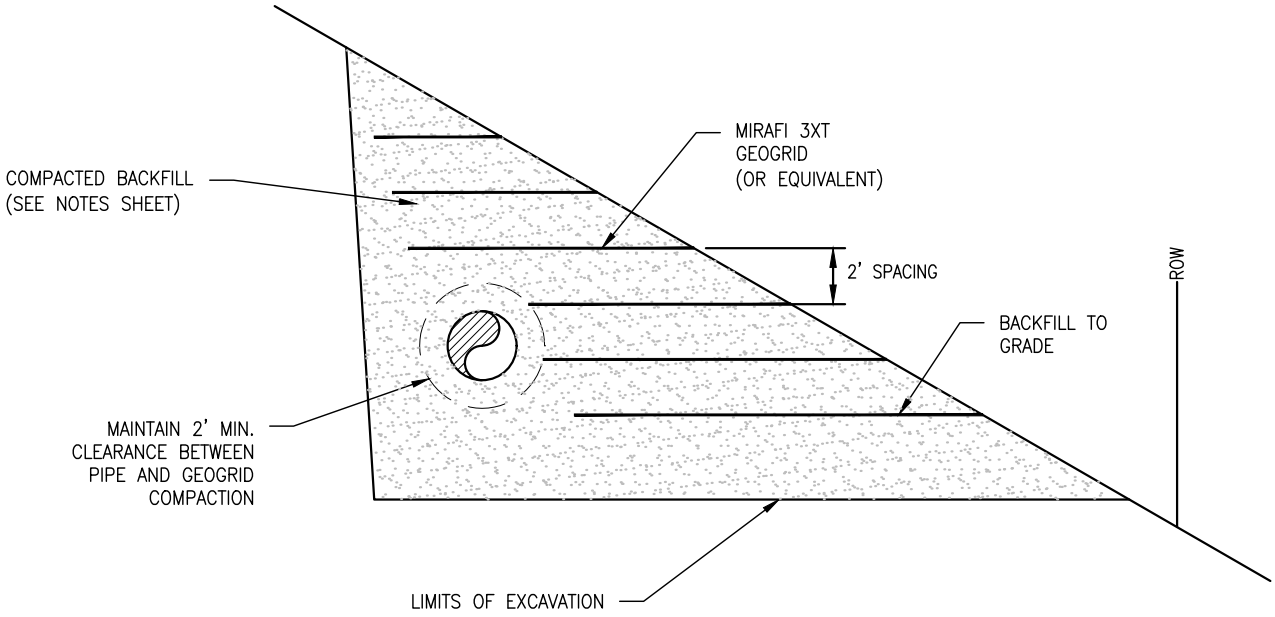

THIS TYPICAL CONSTRUCTION DETAIL IS INTENDED TO PROVIDE GUIDANCE TO THE PIPELINE CONTRACTOR. THE ACTUAL CONSTRUCTION TECHNIQUES MAY DIFFER DEPENDING UPON FIELD CONDITIONS AND OR REGULATORY REQUIREMENTS.

DRAWN	TDD	DATE	2/03/2016
CHECKED	MMF	DATE	2/03/2016
APP'D		DATE	
SCALE	N.T.S.	SHEET	1 OF 3
JOB NO.			
PROJECT ID: PXXXX			

Mountain Valley PIPELINE

DESIGN ENGINEERING

TYPICAL CONSTRUCTION DETAIL

GEOGRID–SIDEHILL

DRAWING NO. MVP–42A

REV. 0

Plotted by: Gildernew, Edward on: February 16, 2017 - 7:39 AM

File Path: C:\Vault Working\Systems\MVP\H-600\H-600 Bid Package\Drawing Files\Design Files\Mechanical\Construction Typicals\MVP-42A.dwg

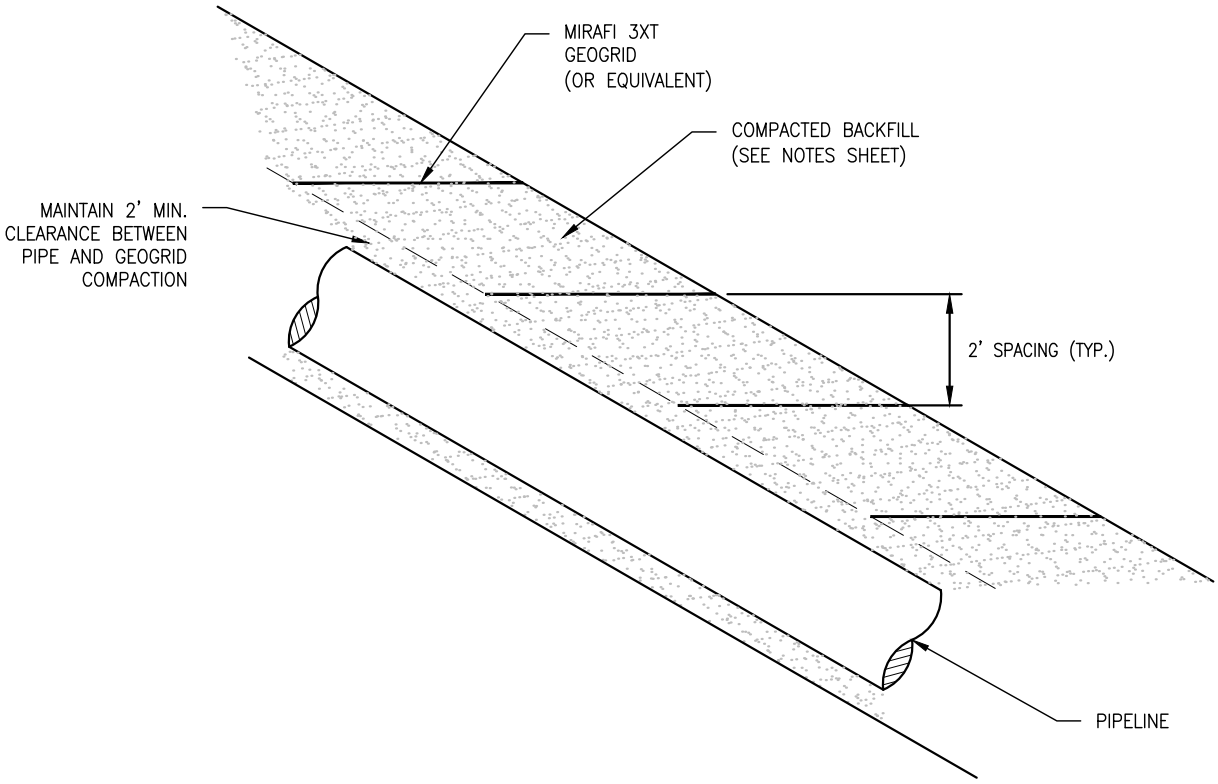

SECTION VIEW

SCALE: NOT TO SCALE

THIS TYPICAL CONSTRUCTION DETAIL IS INTENDED TO PROVIDE GUIDANCE TO THE PIPELINE CONTRACTOR. THE ACTUAL CONSTRUCTION TECHNIQUES MAY DIFFER DEPENDING UPON FIELD CONDITIONS AND OR REGULATORY REQUIREMENTS.

DRAWN	TDD	DATE	2/03/2016
CHECKED	MMF	DATE	2/03/2016
APP'D		DATE	
SCALE	N.T.S.	SHEET	2 OF 3
JOB NO.			
PROJECT ID: PXXXX			

Mountain Valley PIPELINE

DESIGN ENGINEERING

SLIDE MITIGATION DETAIL

GEOGRID–PLANAR

DRAWING NO. MVP–42B

REV. 0

Plotted by: Gildernew, Edward on: February 16, 2017 - 7:39 AM

File Path: C:\Vault Working\Systems\MVP\H-600\H-600 Bid Package\Drawing Files\Design Files\Mechanical\Construction Typicals\MVP-42B.dwg

COMPACTION NOTES

1) ALL ROCKS LARGER THAN 6 INCHES IN SIZE, AND MORE THAN 10 PERCENT BY VOLUME SHOULD BE REMOVED AND PROPERLY DISPOSED FROM THE BACKFILL MATERIAL.
2) THE SUBGRADE AT THE BASE OF THE EXCAVATION SHOULD BE PROOFROLLED WITH A PNEUMATIC TIRED ROLLER OR VEHICLE.
3) THE EXCAVATED AREA SHALL BE BACKFILLED WITH THE CLEANED EXCAVATED SOIL MATERIAL AND COMPACTED IN PLACE.
4) BACKFILL OPERATIONS SHALL BE PERFORMED WHEN SOIL IS SUITABLE FOR COMPACTION (I.E., NOT IMMEDIATELY FOLLOWING A LARGE RAIN, SNOW, OR ICE EVENT). FROZEN FILL SHALL NOT BE USED.
5) THE BACKFILL SHALL BE PLACED IN COMPACTED LIFTS NO GREATER THAN 12 INCHES.
6) MAINTAIN A MINIMUM 2FT CLEARANCE BETWEEN COMPACTION ACTIVITY AND THE GAS PIPELINE.

GEOGRID NOTES

1) GEOGRID REINFORCEMENT SHALL BE TENCATE MIRAFI 3XT OR APPROVED EQUIVALENT.
2) THE GEOGRID MATERIAL SHALL BE STORED UNDAMAGED PURSUANT TO MANUFACTURERS RECOMMENDATIONS.
3) GEOGRID SHALL BE PLACED HORIZONTALLY ON THE BACKFILL WITH THE PRINCIPAL STRENGTH DIRECTION PERPENDICULAR TO THE FACE OF THE SLOPE. ADJACENT PIECES OF PRIMARY GEOGRID SHALL NOT OVERLAP BUT ARE TO BE BUTTED SIDE TO SIDE.
4) REMOVE ALL SLACK IN THE GEOGRID MATERIAL AND ANCHOR AS NECESSARY WITH PINS, OR BAGS TO PREVENT SLACK FROM DEVELOPMENT DURING FILL PLACEMENT AND COMPACTION.
5) FILL IS TO BE PLACED AND SPREAD DIRECTLY ON THE GEOGRID MATERIAL WITH RUBBER TIRED EQUIPMENT ONLY. SPEEDS ARE TO BE KEPT SLOW WITH AS FEW STOPS AND TURNS AS PRACTICAL.
6) DO NOT OPERATE TRACKED EQUIPMENT DIRECTLY ON THE GEOGRID MATERIAL.
7) MAINTAIN A MINIMUM 2FT CLEARANCE BETWEEN GEOGRID MATERIAL AND THE GAS PIPELINE.

THIS TYPICAL CONSTRUCTION DETAIL IS INTENDED TO PROVIDE GUIDANCE TO THE PIPELINE CONTRACTOR. THE ACTUAL CONSTRUCTION TECHNIQUES MAY DIFFER DEPENDING UPON FIELD CONDITIONS AND OR REGULATORY REQUIREMENTS.

DRAWN	TDD	DATE	2/03/2016
CHECKED	MMF	DATE	2/03/2016
APP'D		DATE	
SCALE	N.T.S.	SHEET	3 OF 3
JOB NO.			
PROJECT ID: PXXXX			

Mountain Valley PIPELINE

DESIGN ENGINEERING

TYPICAL CONSTRUCTION DETAIL

GEOGRID NOTES

DRAWING NO. MVP-42C

REV. 0

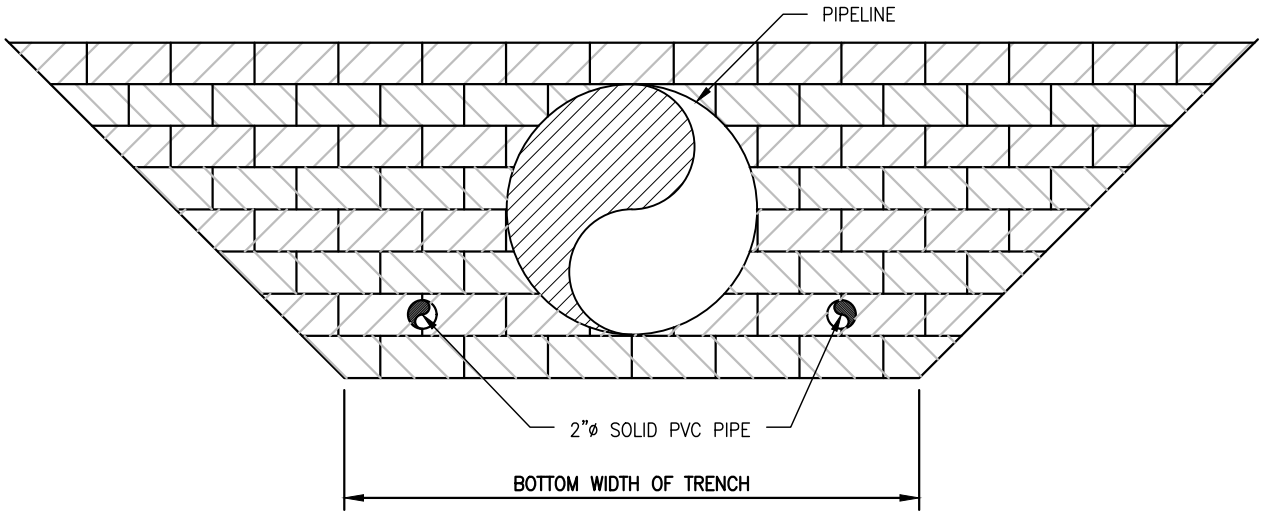

FRONT VIEW
SCALE: NOT TO SCALE

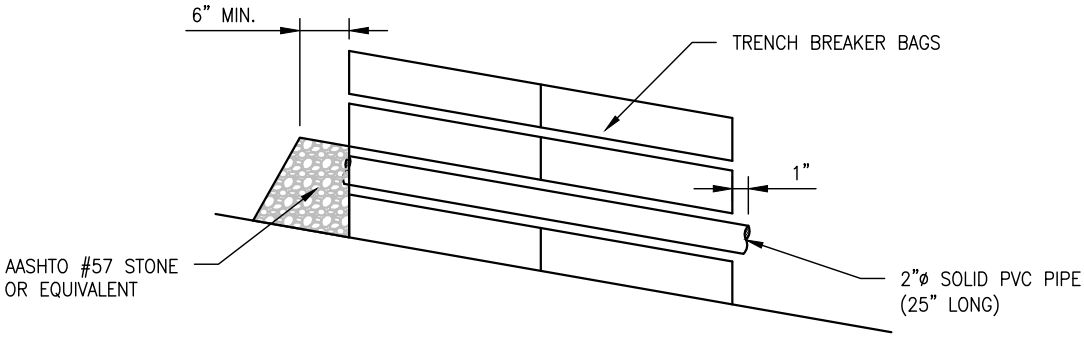

SECTION VIEW
SCALE: NOT TO SCALE

NOTES:
1. PLACE PVC DRAIN PIPE ON FIRST LAYER OF TRENCH BREAKER BAGS.
2. PLACE PVC DRAIN PIPE EQUIDISTANT FROM THE OUTSIDE EDGE OF THE 42" GAS PIPE AND THE BOTTOM LIMITS OF THE TRENCH.
3. EXTEND PVC PIPE THROUGH ENTIRE TRENCH BREAKER AND EXTEND APPROX. 1" PAST END OF BREAKER.
4. AASHTO#57 STONE SHALL BE PLACED TO A MINIMUM 6" THICKNESS UPSLOPE OF THE DRAIN PIPE.

THIS TYPICAL CONSTRUCTION DETAIL IS INTENDED TO PROVIDE GUIDANCE TO THE PIPELINE CONTRACTOR. THE ACTUAL CONSTRUCTION TECHNIQUES MAY DIFFER DEPENDING UPON FIELD CONDITIONS AND OR REGULATORY REQUIREMENTS.

DRAWN	TDD	DATE	4/14/2016
CHECKED	MMF	DATE	4/14/2016
APP'D		DATE	
SCALE	N.T.S.	SHEET	1 OF 2
JOB NO.			
PROJECT ID: PXXXX			

Mountain Valley PIPELINE

DESIGN ENGINEERING

TYPICAL CONSTRUCTION DETAIL

TRENCH BREAKER
PASS-THROUGH DRAIN

DRAWING NO. MVP-43A

REV. 0

Plotted by: Gildernew, Edward on: February 16, 2017 - 7:39 AM

File Path: C:\Vault Working\Systems\MVP\H-600\H-600 Bid Package\Drawing Files\Design Files\Mechanical\Construction Typicals\MVP-43A.dwg

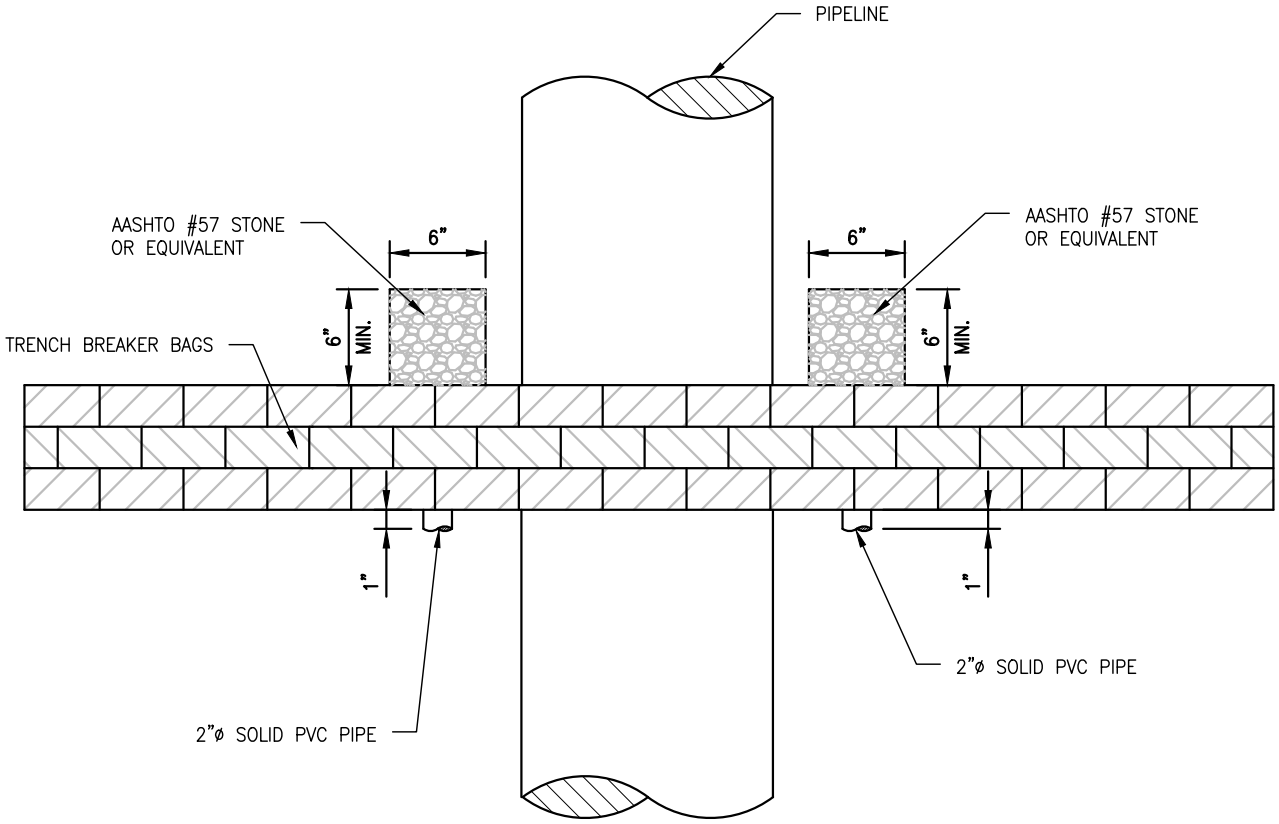

PLAN VIEW

SCALE: NOT TO SCALE

THIS TYPICAL CONSTRUCTION DETAIL IS INTENDED TO PROVIDE GUIDANCE TO THE PIPELINE CONTRACTOR. THE ACTUAL CONSTRUCTION TECHNIQUES MAY DIFFER DEPENDING UPON FIELD CONDITIONS AND OR REGULATORY REQUIREMENTS.

DRAWN	TDD	DATE	4/14/2016
CHECKED	MMF	DATE	4/14/2016
APP'D		DATE	
SCALE	N.T.S.	SHEET	2 OF 2
JOB NO.			
PROJECT ID: PXXXX			

Mountain Valley PIPELINE

DESIGN ENGINEERING

TYPICAL CONSTRUCTION DETAIL

TRENCH BREAKER
PASS-TROUGH DRAIN

DRAWING NO. MVP-43B

REV. 0

Plotted by: Gildernew, Edward on: February 16, 2017 - 7:40 AM

File Path: C:\Vault Working\Systems\MVP\H-600\H-600 Bid Package\Drawing Files\Design Files\Mechanical\Construction Typicals\MVP-43B.dwg

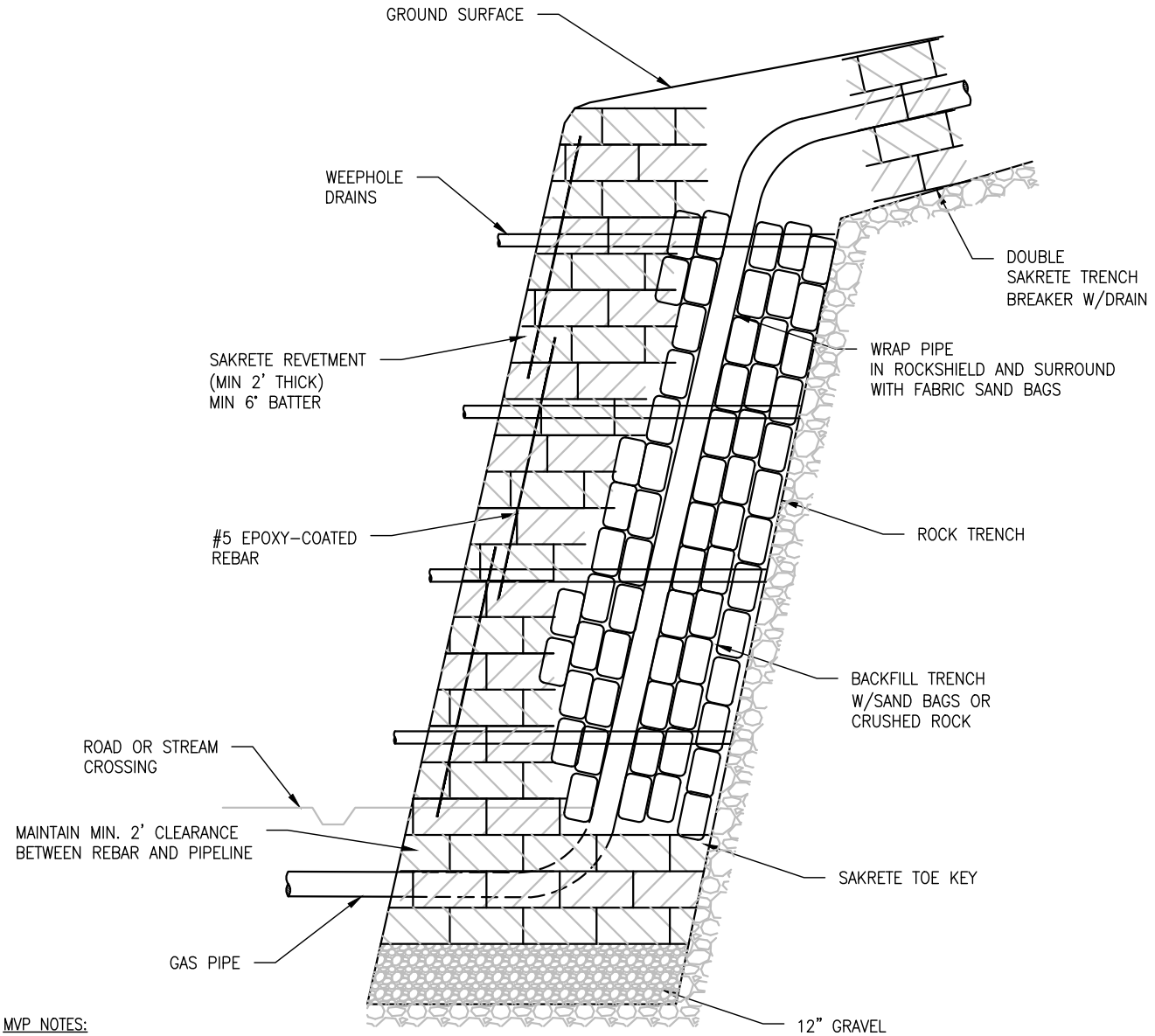

MVP NOTES:

1. SAKRETE BAGS SHOULD EXTEND 4 BAGS DEEP, PIPE SHOULD BE COMPLETELY SURROUNDED BY SAND BAGS, OR CRUSHED ROCK (MAX 6").
2. SAKRETE BAGS SHOULD BE STAGGERED IN A MASONRY FASHION. THE FACE OF THE WALL SHALL BE INCLINED 6°–10° FROM VERTICAL.
3. #5 REBAR SHOULD BE DRIVEN THROUGH THE SAKRETE BAGS.
4. 2"ø PVC WEEPHOLE DRAINS SHALL BE INSTALLED EVERY 15 FT.

SIDE VIEW
SCALE: NOT TO SCALE

THIS TYPICAL CONSTRUCTION DETAIL IS INTENDED TO PROVIDE GUIDANCE TO THE PIPELINE CONTRACTOR. THE ACTUAL CONSTRUCTION TECHNIQUES MAY DIFFER DEPENDING UPON FIELD CONDITIONS AND OR REGULATORY REQUIREMENTS.

DRAWN	OL	DATE	6/29/2016
CHECKED	MMF	DATE	–
APP'D		DATE	
SCALE	N.T.S.	SHEET	1 OF 2
JOB NO.			
PROJECT ID: PXXXX			

Mountain Valley PIPELINE

DESIGN ENGINEERING

TYPICAL CONSTRUCTION DETAIL

SLIDE MITIGATION
HIGHWALL REVETMENT
SIDE VIEW

DRAWING NO. MVP–44A

REV. 0

Plotted by: Gildernew, Edward on: February 16, 2017 - 7:40 AM

File Path: C:\Vault Working\Systems\MVP\H-600\H-600 Bid Package\Drawing Files\Design Files\Mechanical\Construction Typicals\MVP-44A.dwg

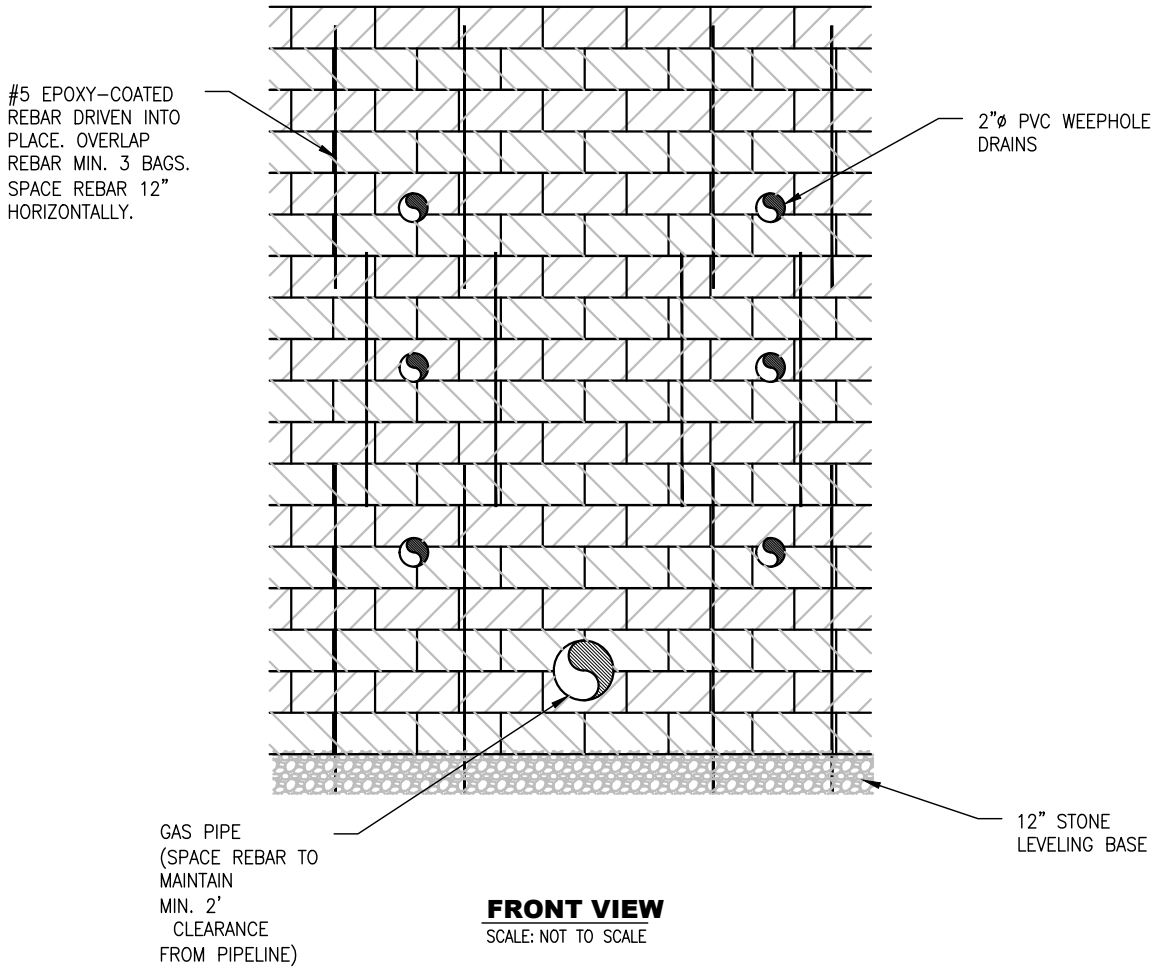

FRONT VIEW
SCALE: NOT TO SCALE

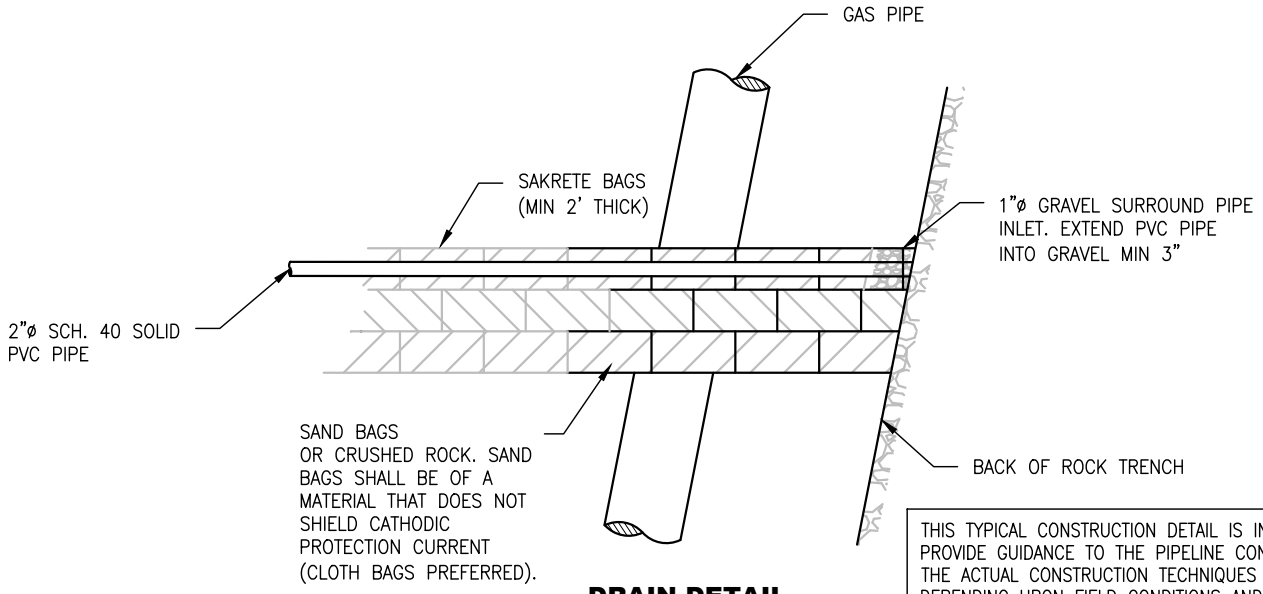

DRAIN DETAIL
SCALE: NOT TO SCALE

THIS TYPICAL CONSTRUCTION DETAIL IS INTENDED TO PROVIDE GUIDANCE TO THE PIPELINE CONTRACTOR. THE ACTUAL CONSTRUCTION TECHNIQUES MAY DIFFER DEPENDING UPON FIELD CONDITIONS AND OR REGULATORY REQUIREMENTS.

DRAWN	OL	DATE	6/29/2016
CHECKED	MMF	DATE	–
APP'D		DATE	
SCALE	N.T.S.	SHEET	2 OF 2
JOB NO.			
PROJECT ID: PXXXX			

Mountain Valley PIPELINE

DESIGN ENGINEERING

TYPICAL CONSTRUCTION DETAIL

SLIDE MITIGATION
HIGHWALL REVETMENT
FRONT VIEW AND DRAIN DETAIL

DRAWING NO. MVP-44B

REV. 0

Plotted by: Gildernew, Edward on: February 16, 2017 - 7:40 AM

File Path: C:\Vault Working\Systems\MVP\H-600\H-600 Bid Package\Drawing Files\Design Files\Mechanical\Construction Typicals\MVP-44B.dwg

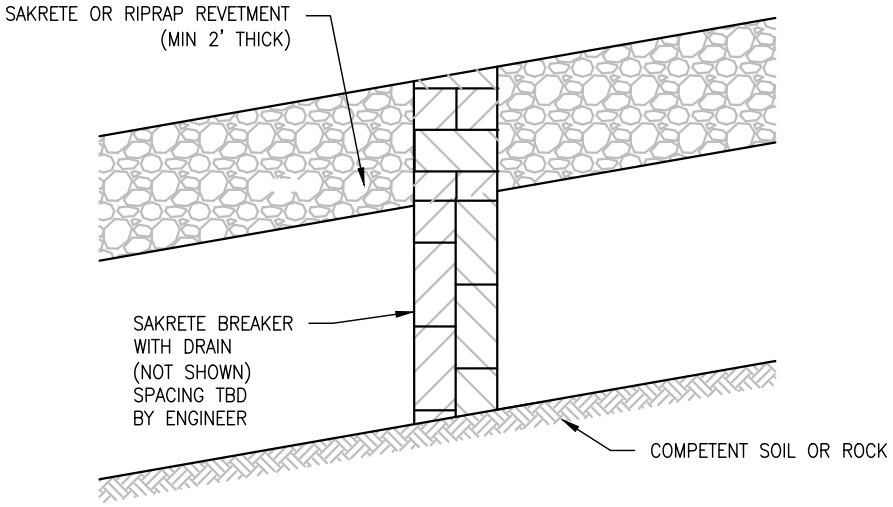

SIDE VIEW

SCALE: NOT TO SCALE

THIS TYPICAL CONSTRUCTION DETAIL IS INTENDED TO PROVIDE GUIDANCE TO THE PIPELINE CONTRACTOR. THE ACTUAL CONSTRUCTION TECHNIQUES MAY DIFFER DEPENDING UPON FIELD CONDITIONS AND OR REGULATORY REQUIREMENTS.

DRAWN	TDD	DATE	2/03/2016
CHECKED	MMF	DATE	2/03/2016
APP'D		DATE	
SCALE	N.T.S.	SHEET	1 OF 1
JOB NO.			
PROJECT ID: PXXXX			

Mountain Valley PIPELINE

DESIGN ENGINEERING

TYPICAL CONSTRUCTION DETAIL

STEEP SLOPE REVETMENT

DRAWING NO. MVP-45

REV. 0

Plotted by: Gildernew, Edward on: February 16, 2017 - 7:40 AM

File Path: C:\Vault Working\Systems\MVP\H-600\H-600 Bid Package\Drawing Files\Design Files\Mechanical\Construction Typicals\MVP-45.dwg

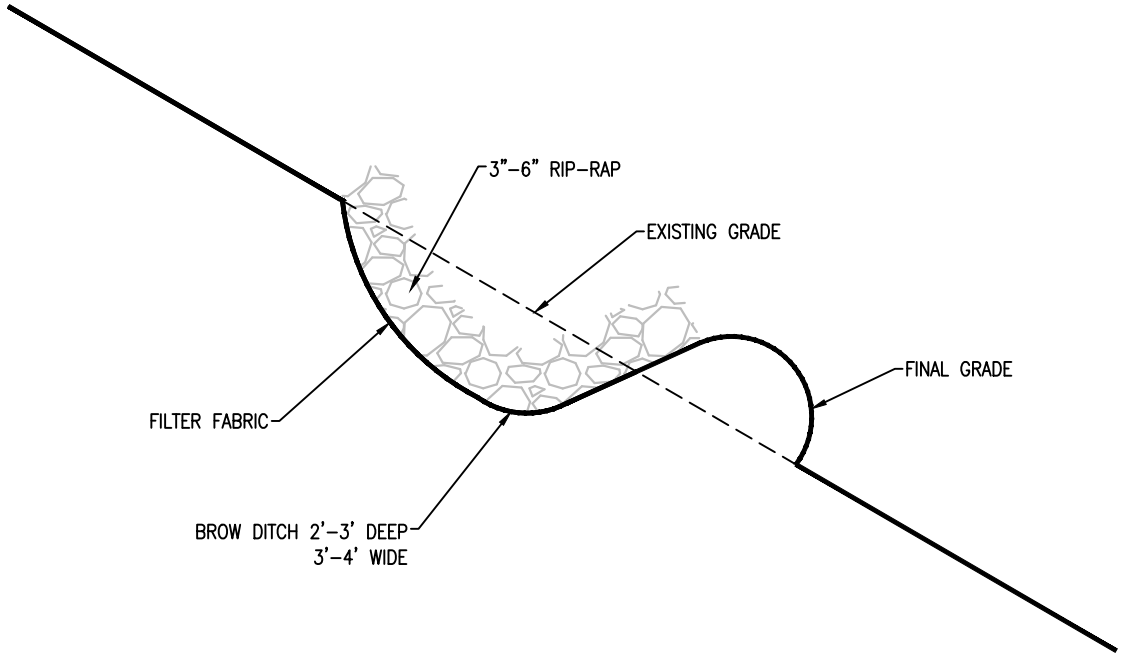

THIS TYPICAL CONSTRUCTION DETAIL IS INTENDED TO PROVIDE GUIDANCE TO THE PIPELINE CONTRACTOR. THE ACTUAL CONSTRUCTION TECHNIQUES MAY DIFFER DEPENDING UPON FIELD CONDITIONS AND OR REGULATORY REQUIREMENTS.

DRAWN	TDD	DATE	7/12/2016
CHECKED	MMF	DATE	7/12/2016
APP'D		DATE	
SCALE	N.T.S.	SHEET	1 OF 1
JOB NO.			
PROJECT ID: PXXXX			

Mountain Valley PIPELINE

DESIGN ENGINEERING

TYPICAL CONSTRUCTION DETAIL

BROW DITCH DETAIL

DRAWING NO. MVP-46

REV. 0

Plotted by: Gildernew, Edward on: February 16, 2017 - 7:40 AM

File Path: C:\Vault Working\Systems\MVP\H-600\H-600 Bid Package\Drawing Files\Design Files\Mechanical\Construction Typicals\MVP-46.dwg

Appendix 6:
General Blasting Plan

Mountain Valley Pipeline Project

Docket No. CP16-10-000

Attachment DR4 Geology 13

General Blasting Plan

Mountain Valley Pipeline Project

Docket No. CP-16-10

General Blasting Plan

April 2016 (revised February 2017)

Revised Changes Highlighted in “Yellow”

TABLE OF CONTENTS

1 INTRODUCTION

The Mountain Valley Pipeline Blasting Plan (Plan) outlines the procedures and safety measures that the contractor will adhere to while implementing blasting activities during the construction of the Mountain Valley Pipeline (MVP). This Plan addresses blasting for the proposed route alignment filed with the Federal Energy Regulatory Commission (FERC).

The MVP Project is a natural gas pipeline system that spans approximately 303 miles from northwestern West Virginia (Wetzel County) to southern Virginia (Pittsylvania County). The MVP will be constructed and owned by Mountain Valley Pipeline, LLC, which is a joint venture of EQT Midstream Partners, LP; NextEra US Gas Assets, LLC; Con Edison Gas Midstream, LLC; WGL Midstream; and RGC Midstream, LLC. This Plan includes a brief description of the pipeline alignment and overall physiographic setting and bedrock geology in the vicinity of the MVP Project. Information on shallow bedrock soils and bedrock outcropping is taken from MVP Project's Resource Report 6 – Geological Resources. A map depicting the location of MVP Project's various pipeline routes is provided in Figure 1.2-1, MVP Project Overview Resource Report 1 – General Project Description.

Information for blast and rip characteristics of the bedrock may be evaluated, at least in a general sense, and applied toward an appropriate bedrock excavation method. The hard and intact nature of the unweathered sedimentary bedrock (sandstones, limestones, and shales) dictates what blasting methods will be utilized. Soft bedrock, such as weathered sandstones, limestones, and shales may possibly be removed by ripping or mechanical means.

Other geologic features may control the effects of blasting. Rock fabric, or the arrangements of minerals, determines intrinsic rock strength, and thus influences rock excavation. Joint spacing, bedding, and foliation also influence rock excavation.

2 PROJECT ALIGNMENT

The proposed FERC jurisdictional facilities described in this report will consist of approximately 303 miles of 42-inch diameter pipeline, installing three new compressor stations that consist of approximately 171,600 horsepower of compression, aboveground sites for interconnections, main line block valves, launchers and receivers, control systems, and other facilities, as further described in Resource Report 1 - General ProjectDescription.

The proposed pipeline, compressor stations, and interconnect facilities are summarized below:

- **Pipeline – Facilities would include:** Installation of approximately 303 miles of 42-inch diameter pipeline with a 1,480 pounds per square inch gauge (psig) maximum allowable operating pressure (MAOP), with portions of the pipeline paralleling existing buried natural gas pipelines. The pipeline will be located in the West Virginia Counties of Braxton, Doddridge, Fayette, Greenbrier, Harrison, Lewis, Monroe, Nicholas, Summers, Webster, and Wetzel, and the Virginia Counties of Craig, Giles, Franklin, Montgomery, Pittsylvania, and Roanoke. The proposed pipeline will extend from Equitrans' existing transmission system in Wetzel County, West Virginia to Transcontinental Gas Pipeline Company's (TRANSCO) Zone 5 Compressor Station 165 in Pittsylvania County, Virginia.

- **Compression** – The MVP Project will consist of the construction of three new compressor stations, totaling approximately 171,600 horsepower of new compression.

- **Interconnections** – The MVP Project will have a total of three (3) interconnections at Equitrans Mobley in Wetzel County, WV; Columbia Pipeline Group WB in Braxton County, WV; and TRANSCO Zone 5 Compressor Station 165 in Pittsylvania County, Virginia.

3 GEOLOGIC SETTING

The proposed Project route begins in Wetzel County, West Virginia, and proceeds in a southeasterly direction through eleven (11) West Virginia counties and six (6) Virginia counties. Along the proposed Project route, topography ranges from 586 to 3,741 feet above mean sea level (amsl) and crosses over several synclines and anticlines, as well as mineral resources, abandoned mines, active coal permit boundaries, oil and gas wells, and other mineral resources that are discussed in detail by Resource Report 6 – Geological Resources.

3.1 Regional Physiographic Setting

The proposed Project route crosses four physiographic provinces, including the Appalachian Plateau, Valley and Ridge, Blue Ridge, and Piedmont provinces that are discussed in detail by Resource Report 6 – Section 6.1.1.

3.2 Regional Geology

The Project traverses geology of numerous timeframes and rock types, as discussed in detail in Resource Report 6 – Section6.1.3.

3.3 Active Faults

The MVP alignment was evaluated for the presence of Quaternary-age faulting and the potential for ground movement and failure (Draper Aden Associates 2015c). The findings of the evaluation are discussed in detail in Resource Report 6 – Section 6.4.1.3.

3.4 Areas of Shallow Bedrock

The pipeline will be installed to allow a minimum cover of 36 inches in areas of shallow bedrock. Therefore, the proposed Project area was evaluated for areas where bedrock might be encountered above a depth of 80 inches (Resource Report 6 - Appendix 6-A and 6-B).

Areas where shallow bedrock may be encountered are discussed in detail in Resource Report 6 – Section 6.2.

Where unrippable subsurface rock is encountered, approved alternative methods of excavation will first be explored including: rock trenching machines, rock saws, hydraulic rams, jack hammers, blasting, etc. The alternative method to be used will be dependent on the proximity to: structures, pipelines, wells, cables, water resources, etc., and the capabilities of the alternative excavation method. Should blasting for ditch excavation be necessary, care will be taken to prevent damage to underground structures (e.g., cables, conduits, and pipelines) or to springs, water wells, or other water sources. Blasting mats or padding will be used as necessary to prevent the scattering of loose rock (fly-rock). All blasting will be conducted during daylight hours and will not begin until occupants of nearby buildings, stores, residences, places of business, and farms have been notified. Where competent sandstone bedrock occurs in the stream bed, blasting may be used to reduce bedrock so the trench can be excavated. Specific locations requiring blasting will be determined in the field, based on the limitations of the mechanical excavation equipment.

3.5 Coal

Coal seams and mines are discussed in detail in Resource Report 6 – Section 6.3.3.

No blasting is foreseen to occur within the limits of an active surface mine or an active deep mine. Any blasting to occur within these mineral areas would require a notice of the planned blasting. This notice would allow the mining company to confirm that no mining is occurring. However, if an area of blasting is found to be within an active mine area, the mining company will participate in the development of the Blasting Plan for that length of pipeline trench within the active mining

area. The mining company will be provided with a five (5) working day notice (minimum). This notice will be both verbal and written.

3.6 Sand, Gravel, Clay, and Crushed Rock

Sand, gravel, clay, and crushed rock quarries are discussed in detail in Resource Report 6 – Section 6.3.1.

No blasting is foreseen to occur within the limits of an active quarry surface mine or an active underground quarry mine. Any blasting to occur within active mining areas would require a notice of the planned blasting. This notice would allow the quarry/mining company to confirm that no mining is occurring. However, if an area of blasting is found to be within an active mine area, the mining company will participate in the development of the blasting plan for that length of pipeline trench within the active mining area. The mining company will be provided with a five (5) working day notice (minimum). This notice will be both verbal and written.

4 BLASTING SPECIFICATIONS

Blasting for grade or trench excavation will be considered only after all other reasonable means of excavation have been evaluated and determined to be unlikely to achieve the required results. MVP may specify locations (foreign line crossings, nearby structures, etc.) where consolidated rock will be removed by approved mechanical equipment, such as rock trenching machines, rock saws, hydraulic rams, or jack hammers, instead of blasting. Areas where blasting may be required will be surveyed for features, such as karst terrain, structures, utilities, and wells. The pre-construction condition of human-occupied buildings will be documented. Occupied buildings and their condition within 150 feet of the blasting area will be documented as to their pre-blast condition, as set forth in Appendix A - Pre-Blast Survey, and their condition after blasting, as set forth in Appendix D - Post-Blast Survey. MVP will provide verbal notification, followed by written documentation, to the buildings' occupant(s) of any blasting activity during both pre-construction and post-construction within 150 feet of a blast location.

If blasting is conducted within 150 feet of an active water well, as necessary, MVP will conduct a pre-construction evaluation of the well. Upon request by a landowner who had a pre-construction test, a post-construction test will be performed. Landowners will be contacted by an MVP representative, and a qualified independent contractor will conduct the testing. Wells within 150 feet of proposed Project work areas are tabulated in Resource Report 2 - Water Use and Quality.

MVP will evaluate, on a timely basis, landowner complaints regarding damage resulting from blasting to wells, homes, or outbuildings. If the damage is substantiated, MVP will negotiate a settlement with the landowner that may include repair or replacement.

Before any blasting occurs, Contractor will complete a project/site-specific blasting plan and provide it to MVP for review. No blasting shall be done without prior approval of MVP. In no event shall explosives be used where, in the opinion of MVP, such use will endanger existing facilities. The Contractor shall obtain MVP approval, and provide forty-eight (48) hours notice prior to the use of any explosives. MVP will provide at least a 24-hour notice to occupants of nearby (within 150 feet of blasting area) buildings, stores, residences, businesses, farms, and other occupied areas prior to initiating blasting operations. These notices will be verbal, followed by written documentation of the 24-hour notice.

4.1 Specifications

Blasting shall adhere to the following federal, state, county, township, local, and MVP standards and regulations. These standards and regulations are to be considered as the minimum requirements. Should there be a conflict between jurisdictions, standards, and regulations, the most stringent jurisdictions, standards, and regulations shall be followed.

These blasting requirements for the MVP Project are as follows:

- MVP Project, Resource Report 6 - Geological Resources, Docket No. PF15- 3.
- MVP, Design and Construction Manual, Design Standard, Pipeline, 4.11 Blasting Proximate to Buried Pipelines.
- MVP, Design and Construction Manual, Design Standard, Pipeline, 4.17 Blasting Activities During Construction.
- 29 CFR 1926 Subpart U – Blasting and the Use of Explosives.
- 27 CFR 555 Subpart K, U. S. Bureau of Alcohol, Tobacco, and Firearms.
- 30 CFR 816.68 Mine Safety and Health Administration (MSHA).
- 49 CFR Part 192 USDOT.
- 27 CFR Part 55.
- 30 CFR '715.19.
- National Fire Protection Association 495.
- U. S. Bureau of Mines Report of Investigations 8507.
- West Virginia 199 CSR 1 Title 199 Series 1.
- Virginia 4 VAC25-130-816.11, 4 VAC25-130-816.64, 4 VAC25-110-210, and 3 VAC25-150-250.

5 PRE-BLAST INSPECTIONS

As required by Resource Report 6 – Geological Resources, MVP shall conduct pre- blast surveys, with landowner permission, to assess the conditions of structures, wells, springs, and utilities within 150 feet of the proposed construction ROW. Should local or state ordinances require inspections in excess of 150 feet from the work, the local or state ordinances shall prevail. The survey will include, at a minimum:

- Informal discussions to familiarize the adjacent property owners with blasting effects and planned precautions to be taken on this project;
- Determination of the existence and location of site-specific structures, utilities, septic systems, and wells;
- Detailed examination, photographs, and/or video records of adjacent structures and utilities; and
- Detailed mapping and measurement of large cracks, crack patterns, and other evidence of structural distress.

The results will be summarized in a Pre-Blast Condition Report that will include photographs and be completed prior to the commencement of blasting. The pre-blast conditions will be documented with the information outlined by “Pre-Blast Survey, MVP Project”. This Pre-Blast Survey Form is considered the minimum information needed. Appendix BP-A presents the Pre-Blast Survey Form. The completion of the Pre-Blast Survey Form is in addition to all other local, county, township, state, or federal reporting/survey data collection and reports.

6 MONITORING OF BLASTING ACTIVITIES

During blasting, MVP contractors will take precautions to minimize damage to adjacent areas and structures. Precautions include:

- Dissemination of blast warning signals in the area ofblasting.
- Backfilling with subsoil (no topsoil to be used) or blasting mats or other approved methods.
- Blast warning in congested areas, in shallow water bodies, or nearstructures that could be damaged by fly-rock.
- Use of matting or other suitable cover, as necessary, to prevent fly-rock from damaging adjacent protected natural resources.
- Posting warning signals, flags, and/orbarricades.
- Following Federal, State, Local, and MVP procedures and regulations for safe storage, handling, loading, firing, and disposal of explosivematerials.
- Manning adjacent pipelines at valves for emergency response, as appropriate.
- Posting of portable signage, portable barricades, and visual survey of the blast area access ways to prevent unauthorized entrance into the blast zone by spectators and/or intruders.
- Maintain communications between all persons involved for security of the blast zone during any and all blasting/firing.

Excessive vibration will be controlled by limiting the size of charges and by using charge delays, which stagger each charge in a series of explosions.

If the Contractor has to blast near buildings or wells, a qualified independent Contractor will inspect structures or wells within 150 feet, or farther if required by local or state regulations, of the construction right-of-way prior to blasting, and with landowner permission. Post-blast inspections by company's representative will also be performed, as warranted. All blasting will be performed by registered blasters and monitored by experienced blasting inspectors. Recording seismographs will be installed by the Contractor at selected monitoring stations under the observation of MVP personnel. During construction, the Contractor will submit blast reports for each blast and keep detailed records as described in Section 7.10.

As appropriate, effects of each discharge will be monitored at the closest adjacent facilities by seismographs.

If a charge greater than eight pounds per delay is used, the distance of monitoring will be in accordance with the U. S. Bureau of Mines Report of Investigations8507.

To maximize its responsiveness to the concerns of affected landowners, MVP will evaluate all complaints of well or structural damage associated with construction activities, including blasting. A toll-free landowner hotline will be established by MVP for landowners to use in reporting complaints or concerns. In the unlikely event that blasting activities temporarily impair a water well, MVP will provide alternative sources of water or otherwise compensate the owner. If well or structural damage is substantiated, MVP will either compensate the owner for damages or arrange for a new well to be drilled.

7 BLASTING REQUIREMENTS

MVP has standard practices for blasting operations, as outlined by Sections 1.0 and 4.0 of this Blasting Plan. The potential for blasting along the pipeline to affect any wetland, municipal water supply, waste disposal site, well, septic system, spring, or pipelines will be minimized by controlled blasting techniques and by using mechanical methods for rock excavation as much as possible. Controlled blasting techniques have been effectively employed by MVP and other companies to protect active gas pipelines within 15 feet of trench excavation. The following text presents details of procedures for powder blasting.

7.1 General Provisions

- The contractor will provide all personnel, labor, and equipment to perform necessary blasting operations related to the work. The Contractor will provide a permitted blaster possessing all permits required by the local, county, township, and states in which blasting is required during construction, and having a working knowledge of state and local laws and regulations that pertain to explosives.
- Project blasting will be done in accordance with 27 CFR Part 55, 30 CFR '715.19, National Fire Protection Association 495 – Explosive Materials Code; the above referenced Specification; and all other state and local laws, when required; and regulations applicable to obtaining, transporting, storing, handling, blast initiation, ground motion monitoring, and disposal of explosive materials and/or blasting agents.
- The Contractor shall be responsible for supplying explosives and blasting materials that are perchlorate-free in order to eliminate the potential for perchlorate contamination of ground water. Further, the use of ammonium nitrate is prohibited.
- The contractor shall be responsible for securing and complying with all necessary permits required for the transportation, storage, and use of explosives. The Contractor shall be responsible for all damages or liabilities occurring on or off the right-of-way resulting from the use of explosives. When the use of explosives is necessary to perform the work, the Contractor shall use utmost care not to endanger life or adjacent property, and shall comply with all applicable laws, rules, and regulations governing the storage, handling, and use of such explosives. MVP will conduct a pre- and post- surficial leak survey along the centerline of each adjacent live pipeline to the planned blast area. The surficial leak survey will be conducted by MVP's employees and/or designated representative, with the surficial leak survey extending a minimum of 100- feet (both directions) past the limits of the planned blast area.
- Blasting activities will strictly adhere to all MVP, local, state, and federal regulations and requirements applying to controlled blasting and blast vibration limits in regard to structures, underground gas pipelines, and underground utilities. In addition to following state and federal blasting guidelines, MVP will contact each governmental agency (if project is not undertaken within twelve months as of the date of this Blasting Plan) along the proposed route to determine local ordinances or guidelines for blasting (refer to Table 7.1.1).

TABLE 7.1.1 MVP PROJECT CONTACTS AND RELATED PERMITTING PRIOR TO BLASTING			
JURISDICTION	CONTACT	AGENCY	PERMIT/REGULATION
West Virginia	D. Vande Linde 304.926.0464	WVDEP Office of Explosives and Blasting	Permit and Notification
Virginia	Marshal R. Moore 276.415.9700	DMME Virginia Department of Mines, Minerals, and Energy	Permit and Notification
Virginia	Region 3 Marion Office 276.783.4860	DGIF Virginia Department of Game and Inland Fisheries	Notification: 48 hour notice
Virginia	Office: 804.371.0220 statefiremarshal@ vdfp.virginia.gov	SFMO Virginia State Fire Marshal's Office	Permit and Notification: 24 hour notice
Virginia and West Virginia	Anita Bradburn Realty Specialist Management Branch Huntington District USACE 304.399.5890	US Army Corps of Engineers	Notification: Blasting within 0.25-mile of Weston and Gauley Bridge Turnpike Trail and the Jefferson National Forest
Virginia and West Virginia	Joby Timm Forest Supervisor O: 540.265.5118 C: 540.339.2523 jtimm@fs.fed.us	US Forest Service	Notification: Blasting within 0.25-mile of Weston and Gauley Bridge Turnpike Trail and the Jefferson National Forest

The Construction Contractor will be made aware of all applicable procedures and local requirements, and it will ultimately be the Contractor's responsibility to notify officials and receive appropriate blasting permits and authorization.

Typically, local regulations require copies of the blasting Contractor's Certificate of Insurance and License. In some jurisdictions, a Certificate of Bond will also be required, as well as a qualified person hired to oversee the blasting procedure.

The MVP Chief Blasting Inspector (CBI) or designated representative shall have the opportunity to witness all rock excavations or other use of explosives. The Contractor shall conduct all blasting operations in a safe manner which will not cause harm to the existing pipelines and structures in the vicinity. If the CBI determines that any project blasting operations have been conducted in an unsafe manner, the CBI will notify the Contractor of the unsafe activity. If any further unsafe actions occur on the part of the blasting firm, the CBI will request the Contractor terminate the Contract of the blasting firm and hire another blasting company.

Any failure to comply with the appropriate law and/or regulations is the sole liability of the Contractor. The Contractor and the Contractor's permitted blaster shall be responsible for the conduct of all blasting operations, which shall be subject to inspection requirements.

A Blasting Fact Sheet will be distributed to landowners where blasting is proposed and affected landowners will be contacted prior to any blasting activities.

7.2 Storage Use at Sites

Explosives and related materials shall be stored in approved facilities required under the applicable provisions contained in 27 CFR Part 55, Commerce in Explosives. The handling of explosives may be performed by the person holding a permit to use explosives or by other employees under his or her direct supervision, provided that such employees are at least 21 years of age. While explosives are being handled or used, smoking shall not be permitted, and no one near the explosives shall possess matches, open light, or other fire or flame within 50 feet of the explosives, in accordance with OSHA requirements. Suitable devices or lighting safety fuses are exempt from this requirement. No person shall handle explosives while under the influence of intoxicating liquors or narcotics at any time during construction of the Project. Original containers or Class II magazines shall be used for taking detonators and other explosives from storage magazines to the blasting area. Partial reels of detonating cord do not need to be in closed containers, unless transported over public highways. Containers of explosives shall not be opened in any magazine or within 50 feet of any magazine. In opening kegs, or wooden cases, no sparking metal tools shall be used; wooden wedges and either wood, fiber or rubber mallets shall be used. Non-sparking metallic slitters may be used for opening fiberboard cases.

No explosive materials shall be located or stored where they may be exposed to flame, excessive heat, sparks, or impact.

Explosives or blasting equipment that are obviously deteriorated or damaged shall not be used. Explosive materials shall be protected from unauthorized possession and shall not be abandoned.

No attempt shall be made to fight a fire if it is determined the fire cannot be contained or controlled before it reaches explosive materials. In such cases, all personnel shall be immediately evacuated to a safe location and the area shall be guarded from entry by spectators or intruders.

No firearms shall be discharged into or in the vicinity of a vehicle containing explosive materials or into or in the vicinity of a location where explosive materials are being handled, used, or stored.

7.3 Pre-Blast Operations

The Contractor is required to submit a planned schedule of blasting operations to the CBI or his designated representative for approval, prior to commencement of any blasting or pre-blast operation, which indicates the maximum charge weight per delay, hole size, spacing, depth, and blast layout. If blasting is to be conducted adjacent to an existing pipeline, approval must be received from the pipeline's Engineering Department. The Contractor shall provide this schedule to the CBI at least five working days prior to any pre-blast operation for approval and use. Where residences or other structures are within 150 feet of the blasting operation, the CBI may require notification in excess of five days. The blasting schedule is to include the blast geometry, drill hole dimensions, type and size of charges, stemming, and delay patterns and should also include a location survey of any dwelling or structures that may be affected by the proposed operation. Face material shall be carefully examined before drilling to determine the possible presence of unfired explosive material. Drilling shall not be started until all remaining butts of old holes are examined for unexploded charges, and if any are found, they shall be re-fired before work proceeds. No person shall be allowed to deepen the drill holes that havecontained explosives.

Drill holes shall be large enough to permit free insertion of cartridges of explosive materials. Drill holes shall not be collared in bootlegs or in holes that have previously contained explosive materials. Holes shall not be drilled where there is a danger of intersecting another hole containing explosive material. Charge loading shall be spread throughout the depth of the drill hole or at the depths or rock concentration in order to obtain the optimum breakage of rock.

Loading and firing shall be performed or supervised only by a person possessing an appropriate blasting permit and license. All drill holes shall be inspected and cleared of any obstruction before loading. No holes shall be loaded, except those to be fired in the next round of blasting. After loading, all remaining explosives shall be immediately returned to an authorized magazine.

A maximum loading factor of 4.0 pounds of explosive per cubic yard of rock shall not be exceeded. However, should this loading fail to effectively break up the rock, a higher loading factor shall be allowed if the charge weight per delay is reduced by a proportional amount and approved by the CBI. The minimum safe distance from the blasting area to a live buried pipeline is placed at 10 feet measured horizontally from the edge of the blasting area to the outer edge of the affected pipeline. The site-by-site minimum safe distance between blasting areas and adjacent live natural gas pipelines will be calculated each time blasting is to occur using PIPEBLAST computer modeling program or other recognized industrial standards and applying the measured site conditions. The minimum safe distance and supporting calculations and site measurements are to be submitted for approval to MVP's CBI at least 48 hours before blasting is to occur.

All blasts will be monitored to ensure the peak particle velocity does not exceed the following specified maximum velocities:

- Four (4) inches per second for underground, welded, steel pipeline.
- Two (2) inches per second for underground, coupled, steel pipelines; above ground and underground structures; or waterwells.

The MVP Engineering Department may approve higher peak particle velocities in writing, given site-specific conditions.

The maximum amplitude of the elastic wave created by any blast shall not exceed 0.0636 inches.

The type of explosive and initiation system to be used is as follows:

7.3.1 Dyno Nobel Unimax TM (or equivalent)

An extra-gelatin dynamite with a specific gravity of 1.51 g/cc, a detonation rate of 17,400 f/s (unconfined) and a calculated energy of 1,055 c/g. The cartridge size will generally be 2” x 8” (1.25 lbs/cartridge) or 2” x 16” (2.50 lbs/cartridge).

7.3.2 Dyno Nobel Unigel TM (or equivalent)

A semi-gelatin dynamite with a specific gravity of 1.30 g/cc, a detonation rate of 14,200 f/s (unconfined) and a calculated energy of 955 c/g. The cartridge size will generally be 2” x 8” (1.15 lbs/cartridge) or 2” x 26” (2.30 lbs/cartridge).

7.3.3 Dyno Nobel Dynomax ProTM (or equivalent)

A propagation-resistant dynamite, with a specific gravity of 1.45 g/cc, a detonation rate of 19,700 f/s (unconfined) and a calculated energy of 1,055 c/g. The cartridge size will generally be 2” x 8” (1.225 lbs/cartridge) or 2” x 16” (24.45lbs/cartridge).

7.3.4 Dyno Nobel NONEL TM 17 or 25 Millisecond Delay Connectors or Dyno Nobel NONEL EZ Det TM (or equivalent)

A nonelectric delay detonator with a 25/350, 25/500, or 25/700 millisecond delay.

7.3.5 Dyno Nobel NONEL TM Nonelectric Shock Tube System Detonator (or equivalent)

The Shock Tube will be used to initiate all shots. The Shock Tube will be attached at one point only for initiation of the entire shot and will not be used for down hole priming.

Each borehole shall be primed with NONEL EZ Det system. The total grains of the detonator system should be limited to prevent blowing stemming out of the drill hole. Boreholes shall be delayed with a minimum of 25 milliseconds (“ms”). Slightly longer delays may be used over steep hills with prior approval of the CBI. Primers shall not be assembled closer than 50 feet (15.25 m) from any magazine. Primers shall be made up only when and as required for immediate needs.

Blasting shall not be permitted if any part of the live pipeline lies within the perimeter of the crater zone, regardless of size of the blast/shot. Crater zone shall be defined as a circle created by turning a radius along the ground surface equal to the length of the depth below the surfaces where the shot is placed.

Tamping shall be done only with wood rods without exposed metal parts, but non-sparking metal connectors may be used for jointed poles. Plastic tamping poles may be used, provided the authority having jurisdiction has approved them. Violent tamping shall be avoided.

Recommended stemming material shall consist of crushed stone with d50 – 3/8 inch, which will not bridge over like dirt and will completely fill voids in the hole.

When safety fuse is used, the burning rate shall be determined and in no case shall fuse lengths less than 120 seconds be used. The blasting cap shall be securely attached to the safety fuse with a standard ring type cap crimper.

Pneumatic loading of blasting agents in blast holes primed with electric blasting caps or other static-sensitive initiation systems shall comply with the following requirements:

- A positive grounding device shall be used for the equipment toprevent accumulation of static electricity;
- A semi-conductive discharge hose shall be used; and
- A qualified person shall evaluate all systems to assure they will adequately dissipate static charges under field conditions.

No blasting caps or other detonators shall be inserted in the explosives without first making a hole in the cartridge for the cap with a wooden punch of proper size or standard cap crimper.

After loading for a blast is completed, all excess blasting caps or electric blasting caps and other explosives shall immediately be removed from the area and returned to their separate storagemagazines.

7.4 Discharging Explosives

Persons authorized to prepare explosive charges or conduct blasting operations shall use every reasonable precaution, including, but not limited to, warning signals, flags, barricades, or woven wire mats to ensure the safety of the general public and workmen.

The Contractor shall obtain MVP's approval and provide them at least 24-hour notice prior to the use of any explosives. The Contractor shall comply with local and state requirements for pre-blast notifications, such as the One-Calls of West Virginia and Virginia, which require a 72 hour, minimum, notice.

Whenever blasting is being conducted in the vicinity (within 150 feet) of gas, electric, water, fire alarm, telephone, telegraph, and other utilities, the blaster shall notify the appropriate representatives of such utilities at least 24-hours in advance of blasting. Verbal notice shall be confirmed with written notice. In an emergency, the local authority issuing the original permit may waive this time limit. MVP's CBI is to be notified, both verbally and copied, with the written notice for notifications.

Blasting operations, except by special permission of the authority having jurisdiction and MVP, shall be conducted during daylight hours.

When blasting is done in congested areas or in proximity to a significant natural resource, structure, railway, highway, or any other installation that may be damaged, the blast shall be backfilled before firing or covered with a mat, constructed so it is capable of preventing fragments from being thrown. In addition, all other possible precautions shall be taken to prevent damage to livestock and other property and inconvenience to the property owner or tenant during blasting operations. Any rock scattered outside the right-of-way by blasting operations shall immediately be hauled off or returned to the right-of-way.

Precautions shall be taken to prevent accidental discharge of blasting caps from currents induced by lightning, adjacent power lines, dust and snow storms, or other sources of extraneous electricity. These precautions shallinclude:

- Suspension of all blasting operations and removal of all personnel from the blasting area during the approach and progress of an electrical storm; and
- The use of lightning detectors is mandatory.

No blast shall be fired until the blaster in charge has made certain that all surplus explosive materials are in a safe place, all persons and equipment are at a safe distance or under sufficient cover, and an adequate warning signal has been given.

No loaded holes shall be left unattended or unprotected. Explosive shall not be primed or fused until immediately before the blast. After each blasting sequence, the Blasting Contractor shall inspect the site for cut-offs and misfires. All explosives or blasting agents shall be verified as discharged prior to starting/resuming excavation.

Only the person making connections between the cap and fuse system shall fire the shot. All connections should be made from the bore hole back to the source of ignition. If there are any misfires while using cap and fuse, all persons shall remain away from the charge for at least 15 minutes. Misfires shall be handled under the direction of the person in charge of the blasting and the construction right-of-way shall be carefully searched for the unexploded charges.

Explosives shall not be extracted from a hole that has once been charged or has misfired unless it is impossible to detonate the unexploded charge by insertion of a fresh additional primer.

7.5 Waterbody Crossing Blasting Procedures

Blasting should not be conducted within or near a stream channel without prior consultation and approval from the appropriate federal, state, and local authorities having jurisdiction to determine what protective measures must be taken to minimize damage to the environment and aquatic life of the stream. At a minimum, a five work day notice must be provided to the appropriate federal, state, and/or local authorities. In addition to the blasting permits a separate permit and approvals are required for blasting within the waters of the states of West Virginia and Virginia.

Rock drill or test excavation will occur within the limits of a flowing stream only after the streamflow has been redirected and maintained via dam and pump or flume crossing, as presented in Resource Report 2 - Section 2.1.4 Waterbody Crossing Methods. For those streams that have no flow at the time of rock drill or test excavation activities, the rock testing will be conducted in the streambed and the streambed disturbance created by the rock testing will be restored within the same day of disturbance.

Rock drill or test excavation and resulting blasting will only occur once the streamflow has been redirected and maintained via dam and pump or flume crossing method. For these crossings of flowing streams, work will commence immediately after the initial disturbance and continue until the stream crossing is completely installed and the streambed restored. Stream crossing methods and crossing mitigation measures are presented in Resource Report 2 - Section2.1.

To facilitate planning for blasting activities for waterbody crossings, rock drilled or test excavations may be used in waterbodies to test the ditch-line during mainline blasting operations to evaluate the presence of rock in the trench-line. The excavation of the test pit or rock drilling is not included in the time window requirements for completing the crossing. For testing and any subsequent blasting operations, streamflow will be maintained through the site. When blasting is required, the FERC timeframes for completing in-stream construction begin when the removal of blast rock from the waterbody is started. If, after removing the blast rock, additional blasting is required, a new timing window will be determined in consultation with the Environmental Inspector. If blasting impedes the flow of the waterbody, the Contractor can use a backhoe to restore the stream flow without triggering the timing window. The complete waterbody crossing procedures are included in MVP's E&SCP.

MVP will immediately halt all construction activities if the loss of streamflow occurs after a blasting event. The construction contractor and MVP's Environmental Inspector will immediately evaluate the loss of water and develop a Contingency Plan to restore streamflow. This Contingency Plan will be provided to the local, state, and federal agencies having jurisdiction over the stream impacted, for their review and approval. Congruent with the contractor's and MVP's Environmental Inspector's evaluation, temporary emergency contingency measures will be employed to halt the

loss of streamflow. Immediately upon the agencies' approval of the Contingency Plan, the contractor will implement the measures outlined in the agency-approved Contingency Plan.

The temporary emergency contingency measures and the agency-approved Contingency Plan measures will be implemented in accordance with Resource Report 2

- Section 2.2.5 Construction and Operation Impacts and Mitigation.

7.6 Karst Terrain Blasting Procedures

Karst Terrain Mitigation Plan has been developed for the Karst Terrain areas identified (Resource Report Appendix 6-D, D.2). This Karst Terrain Mitigation Plan will be followed should any blasting be required for grade and trench excavation.

Blasting in a Karst Terrain will only be considered after all other reasonable means of excavating have been evaluated and determined to be unlikely to achieve the required grade.

Blasting should not be conducted within or near a Karst Area without MVP's Karst Specialist (KS) review and the Karst Blasting Plan obtaining approval from the appropriate federal, state and local authorities having jurisdiction to determine protective measures that must be taken to minimize damage to the Karst Terrain. At a minimum, the individual Karst Terrain Blasting Plan will be provided to the appropriate federal, state and local authorities for review and approval five working days prior to conducting the blasting.

Blasting will be conducted in a manner that will not compromise the structural integrity of the karst hydrology of known karst structures. If rock is required to be blasted to achieve grade, then the following parameters will be adhered to:

- The excavation will be carefully inspected for any voids, openings or other tell-tale signs of solution activity by MVP's KS.
- If the rock removal intercepts an open void, channel, or cave, the work in that area will be stopped until a remedial assessment can be carried out by MVP's KS.
- All use of explosives will be limited to low-force charges that are designed to transfer the explosive force only to the rock which is designated for removal (e.g., maximum charge of 2 inches per second ground acceleration).

7.7 Wetland Crossing Blasting Procedures

Wetland Crossings Mitigation Plan has been developed for the wetland crossings identified (Resource Report 2 - Section 2.3 Wetland Resources). This Wetland Crossings Mitigation Plan will be followed should any blasting be required for trench excavation.

Blasting for trench excavation crossing a wetland will only be considered after all other reasonable means of excavating have been evaluated and determined to be unlikely to achieve the required trench grade.

Blasting should not be conducted within or near a wetland without MVP's Environmental Inspector review and development of a Wetland Crossing Blasting Plan that includes protective measures to minimize damage to wetlands. At a minimum, the individual Wetland Crossing Blasting Plan will be provided to the appropriate federal, state and local authorities for review and approval five working days prior to conducting the blasting.

Blasting will be conducted in a manner that will not compromise the structural integrity of the wetland hydrology of known wetlands. If rock is required to be blasted to achieve trench grade, then the following parameters will be adhered to:

- The excavation will be carefully inspected for any voids, openings, fractures, or other tell-tale signs of dewatering activity by MVP's Environmental Inspector.
- If the rock removal intercepts an open void, channel, or fracture, the work in that area will be stopped until a remedial assessment can be carried out by MVP's Environmental Inspector.
- All use of explosives will be limited to low-force charges that are designed to transfer the explosive force only to the rock which is designated for removal (e.g., maximum charge of 2 inches per second ground acceleration).

7.8 Rock Disposal Due to Blasting

During the course of blasting for grade and trench excavation excess rock fragments that are deemed as unacceptable for trench backfill may be incurred. This excess rock may be used in the restoration of the disturbed right-of-way limits, with the rock buried within the reclamation limits of the right-of-way. With the acceptance, approval and signed individual landowner agreements for the placement of this excess rock, the rock placement will be to a depth that will help stabilize the right-of-way restoration and will be below the root zones of the cover vegetation.

If the excess rock is to be removed from the construction area, it is to be hauled to an approved local- and state-permitted disposal site. This disposal facility will need to demonstrate that it is permitted to accept and dispose of the excess rock from the blasting operations. MVP will obtain a copy of the disposal facility's permit, as issued by the local jurisdiction having authority over the disposal facility and the disposal site within.

7.9 Disposal of Explosive Materials

All explosive materials that are obviously deteriorated or damaged shall not be used and shall be destroyed according to applicable local, state, and federal requirements.

Empty containers and packages and paper or fiberboard packing materials that have previously contained explosive materials shall not be reused for any purpose. Such packaging materials shall be destroyed by burning (outside of the construction right-of- way) at an approved outdoor location or by other approved method. All personnel shall remain at a safe distance from the disposal area.

All other explosive materials will be transported from the job site in approved magazines per local and/or state regulations.

7.10 Blasting Records

A record of each blast shall be made and submitted, along with seismograph reports, to MVP's CBI. The record shall contain the following minimum data for each blast:

- Name of company or contractor;
- Location, date and time of blast;
- Name, signature and license number of contractor and blaster in charge;
- Blast location referenced to the pipeline station/milepost;
- Picture record of the blast area disturbance and of blasted trench;
- Type of material blasted;
- Number of holes, depth of burden and stemming, and spacing;

- Diameter and depth of holes;
- Volume of rock in shot;
- Types of explosives used, specific gravity, energy release, pounds of explosive per delay, and total pounds of explosive pershot;
- Delay type, interval, total number of delays and holes per delay;
- Maximum amount of explosives per delay period of 17 milliseconds or greater;
- Power factor;
- Method of firing and type of circuit;
- Direction and distance in feet to nearest structure and utility neither owned or leased by the person conducting the blasting;
- Weather conditions;
- Type and height or length of stemming;
- If mats or other protection were used; and
- Type of detonators used and delay periods used.

Within 48 hours following a blast, a Blast Report is to be provided to the MVP's CBI. The Blast Report shall provide the information outlined by "Blast Report MVP Project". This Blast Report form is considered the minimum information needed. Appendix BP-B presents the Blast Report form. In addition to the completed Blast Report, the blast design is to be attached and made part of the Blast Report. The Blast Report MVP Project is in addition to all other local, county, township, state, or federal reporting requirements. Copies of these Blast Reports are to be provided to the CBI.

At the conclusion of each blasting event, the Blasting Contractor is to conduct and inventory blasting/explosive materials with a written inventory report attached to the Blast Report. All blasting/explosive materials are to be accounted for. Any discrepancies are to be immediately reported to the governing agencies and the MVP's CBI.

The person taking the seismograph reading shall accurately indicate the exact location of the seismograph, if used, and shall also show the distance of the seismograph from the blast.

Seismograph records, where required, should include:

- Name of person and firm operating and analyzing the seismograph record;
- Seismograph serial number;
- Seismograph reading; and
- Maximum number of holes per delay period of 17 milliseconds orgreater.

Within 72 hours following a blast, at sites monitored by a seismograph, a Seismograph Report is to be provided to the MVP's CBI. Appendix BP-C presents the Seismograph Report Form for the MVP Project. In addition to the completed Seismograph Report, the seismograph readings and written interpretations are to be attached to the report. This reporting is in addition to all other local, county, township, state, or federal reporting requirements. Copies of these Seismograph Reports are to be provided to the CBI.

8 POST-BLASTING INSPECTION

An independent contractor, with landowner permission, will examine the condition of structures within 150 feet, or as required by state or local ordinances, of the construction area after completion of blasting operations, to identify any changes in the conditions of the these properties or confirm any damages noted by the landowner. The independent contractor, with landowner approval, will conduct a resampling of wells within 150 feet, or as required by state or local ordinances, of the construction area. Should any damage or change occur during the blasting operations, an additional survey of the affected property may be made.

Upon receiving notice that a structure or other damages have possibly occurred due to the blasting operations, the Blasting contractor is to conduct a post-blast conditions survey. The post-blast conditions survey shall be conducted within 48 hours after being notified or at the landowner's schedule and permission. The post-blast conditions will be documented with the information outlined by "Post-Blast Survey for the MVP Project". This post-blast form is considered the minimum information needed. Appendix BP-D presents the Post-Blast Survey form.

APPENDIX A

PRE-BLAST SURVEY

Mountain Valley Pipeline Project

PRE-BLAST SURVEY
MOUNTAIN VALLEY PIPELINE PROJECT

STRUCTURE INFORMATION

Owner Name:	
Mailing Address:	
Telephone No.:	
Street Address or Physical Address:	
Latitude:	Longitude:
County/Township:	State:
Nearest Pipeline Station/Milepost:	
Company Structure No.:	

OCCUPANT INFORMATION

Occupant Name:
Mailing Address:
Telephone No.:

SURVEYOR'S INFORMATION

Company Conducting Survey:
Mailing Address:
Telephone No.:
Contact Person to Discuss Survey:
Name of Approved Surveyor:
State of Approval:

STRUCTURE LOCATION MAP

Survey Map: 8 ½” x 11” copy of construction alignment sheet or site specific plan/drawing showing Mountain Valley Pipeline and structure surveyed. Attach map to survey.

SITE PLAN SKETCH

Site Plan: 8 ½” x 11” sketch showing all structures and relative locations, driveways, sidewalks, outbuildings, water wells, septic systems' components, and other man-made features as applicable. Use arrows to show site grade and slope. Include a North arrow and direction and distance to Mountain Valley Pipeline. The site plan sketch shall show the distance from the blast’s end points to the adjacent natural gas pipeline(s).

Exterior Inspection
(Check all that apply)
Page 2

Age of Structure

_____years

- ❑ estimated
- ❑ provided by owner or occupant
- ❑ other (explain)

Use of Structure

- ❑ private dwelling
- ❑ commercial building
  - ❑ retail
  - ❑ factory
  - ❑ office
  - ❑ warehouse/storage
- ❑ multi-family dwelling
- ❑ single-family rental
- ❑ apartment building
- ❑ other (explain)

Type of Structure

- ❑ conventional dwelling
- ❑ mobile home
- ❑ mobile home with frame addition
- ❑ modular
- ❑ commercial (describe)
- ❑ other (explain)
- ❑ single story
- ❑ two story
- ❑ other (describe) _____

Frame Materials

- ❑ conventional wood frame
- ❑ timber frame
- ❑ steel
- ❑ masonry

Foundation Material

- ❑ poured concrete
- ❑ stone block
- ❑ cinder block
- ❑ concrete block
- ❑ other (explain) _____

Foundation Type

- ❑ crawl space
- ❑ full basement
- ❑ partial basement
- ❑ block on footing with center piers
- ❑ piers/posts/pillars with underpinning
- ❑ piers/posts/pillars w/out underpinning
- ❑ other (describe) If dwelling is a mobile home, are tie-downs in use? ❑ yes ❑ no

Exterior Finish Materials

- ❑ brick
- ❑ concrete block
- ❑ cinder block
- ❑ stone
- ❑ stucco
- ❑ brick or stone laminate
- ❑ wood siding
- ❑ aluminum siding
- ❑ vinyl siding
- ❑ shingle (describe type) _____
- ❑ other (explain) _____

Exterior Inspection (cont.)

(Check all that apply)

Page 3

Roofing Material(s)

- ❑ shingles
  - ❑ asphalt
  - ❑ cedar or other wood
  - ❑ other (explain) _____
- ❑ slate
- ❑ tile
- ❑ tin or other metal
- ❑ tar & chip
- ❑ tarpaper
- ❑ other (explain) _____

Roof Configuration

- ❑ sloped
- ❑ flat

Chimney Material

- ❑ block
- ❑ gravel
- ❑ tar & chip ❑ other (explain)

Gutters installed ❑ yes ❑ no

Down spouts installed ❑ yes ❑ no

Routed away from foundation

❑ yes ❑ no

Sidewalk/Walkway Material(s)

- ❑ concrete
- ❑ wood
- ❑ brick
- ❑ pavers/patio blocks
- ❑ flagstone
- ❑ other (explain) _____
- ❑ brick
- ❑ stone
- ❑ metal ❑ other (explain)

Driveway Material(s)

- ❑ concrete
- ❑ asphalt

Exterior Photos Labeled to Match Checklist Items.

Comments (including a description of any substandard construction):

_____
_____
_____
_____
_____
_____
_____
_____
_____

Well/Water Supply System (check all that apply)

Page 4

❑ Public Service Water Supply (*if not checked, complete the remainder of this page, and include a water analysis of untreated water).*

❑ domestic
❑ irrigation domestic garden
❑ irrigation commercial crops
❑ livestock
❑ combined domestic and agricultural
❑ commercial (explain)
_____
❑ no water source at the site (explain)
_____
❑ cistern

Size ___gallons
Age ___years
Supplied by:
❑ rainwater
❑ spring
❑ runoff/stream
Location:
❑ aboveground
❑ buried
Material:
❑ concrete
❑ plastic
❑ metal
❑ other (explain) _____
❑ spring
❑ stream
❑ other (explain) _____

❑ dug well
Depth ____ft. age _____
❑ brick lining
❑ stone lining
❑ other (explain)
❑ Pump type & size _____
_____

❑ drilled well
❑ steel casing
❑ plastic casing
❑ other (explain)
Casing depth _____ ft.
Casing diameter_____in.
Well screen/liner diameter _____ in.
Depth____ft. to ____ft.
Well screen type _____
Vent type/size _____
Well driller _____
Pump type & size _____

Water Quantity

Has well ever gone dry ❑yes ❑no
Has well capacity ever been measured
❑yes ❑no If yes, list
data (recharge rate): _____ gpm
How many people use this water supply?

Water Quality

Does the water cause staining?
❑ yes ❑ no
Stain color: _____
Item stained: _____
Are there particulates (solids) in the water
❑ yes ❑ no
If yes describe the particles
(color, texture):_____
Does the water have an odor?
❑ yes ❑ no If yes, describe the odor
_____

Water Well/Septic-Sewage System

Page 5

Well/Water Supply (continued)

Is there a treatment system?

❑ yes ❑ no

Type of treatment: _____

Is the water sampling point prior to treatment?
❑ yes ❑ no

Sampling Information

May the well be unsealed to measure depth to and of water? ❑ yes ❑ no

Depth of water: _____ft

Ground level to water: _____ft.

May the well be pumped to measure other recharge characteristics? ❑ yes ❑ no

Recharge rate _____gpm

Date sampled: _____

Date measured: _____

Well sample no.: _____

Septic/Sewage Treatment System

- ❑ public service system
- ❑ aeration system
- ❑ package plant
- ❑ septic tank
  - ❑ concrete
  - ❑ plastic
  - ❑ metal
  - ❑ other (explain)
- ❑ drain field
- ❑ other (explain)

Location Information

❑ Water well
❑ Latitude ❑ Longitude

❑ Springs
❑ Latitude ❑ Longitude

❑ Septic/sewage
❑ Latitude ❑ Longitude

Attach lab analysis of the pre-treatment water and any available written well documentation. Provide source of documentation. Photos of water well(s), water supply, water treatment system, and septic/sewage treatment system and area.

Interior Inspection

Provide written documentation of any defects. Written documentation must be accompanied by photos or room sketches for each interior room.

Each interior room sketch must include type of construction materials and covering for each wall, the floor and the ceiling.

Each wall that is found to be defect free must be labeled "room completely surveyed" or "no defects observed".

Show areas hidden from view (hidden by furniture, etc.).

Interior photos of a room should be appropriately labeled to match written documentation to the photo (i.e. room and wall number).

Include a key to abbreviations used.

Include a floor plan sketch with rooms labeled and indicate direction of progression of the inspection.

Comments (include any substandard construction):

Additional Buildings

Page 6

Additional Building (attach additional sheets for each additional building).
Type of building

- ❑barn
- ❑ garage
- ❑ well house
- ❑ storage
- ❑ other (explain) _____

Age _____

- ❑ estimated
- ❑ owner provided

Exterior finish material _____
Frame materials _____
Roof materials _____
Floor materials _____
Foundation materials _____

Is interior finished ❑ yes ❑ no

Interior finish _____

Provide written documentation and photos of exterior and interior with room sketches for each interior room of the additional building.

Comments

Owner/resident:
_____
_____
_____
_____
_____

Surveyor:
_____
_____
_____
_____
_____
_____

APPENDIX B

BLAST REPORT

Mountain Valley Pipeline Project

BLAST REPORT
MOUNTAIN VALLEY PIPELINE PROJECT

Blasting Company:_____

Address:_____
_____
_____

Blast Location: _____to _____ _____ _____
Pipeline Station/Milepost Pipeline Station/Milepost County/Township State

Blast Area: _____
_____
Picture(s) of Blast Area Disturbance Picture(s) of Blasted Trench

Blast Date and Time:_____ _____
Date Military Time

Blaster: _____
Signature of Blaster

_____
Printed Name of Blaster

_____
Blaster's License Number

_____
Blasting Company Name

_____
Blasting Company License Number

_____
Signature of Blasting Company Person in Charge

_____
Printed Name of Person in Charge

Type of Material Blasted:_____
(Geologist Description)
_____

Blast Design:_____
Number of Holes and Diameter

_____
Depth of Burden

_____
Stemming and Spacing

_____
Depth of Holes

_____
Stemming Type and Height/Length

BLAST REPORT
MOUNTAIN VALLEY PIPELINE PROJECT

Page 2

Volume of Shot:_____
Rock Volume of Shot

Explosives and Delays:_____
Type of Explosives Used

_____
Specific Gravity and Energy Release

_____
Pounds of Explosive per Delay

_____
Total Pounds of Explosive per Shot

_____
Type of Delay and Interval

_____
Total Number of Delays and Holes per Delay

_____
Maximum Amount of Explosives per Delay Period of 17 Milliseconds or Greater

_____
Power Factor

Firing:_____
Method of Firing

_____
Type of Circuit

Nearest Structure:_____
Compass Direction and Distance in Feet to Nearest Structure

_____
Nearest Structure Description

Weather:_____
Temperature, Wind and Sky Conditions at Start of Hole Loading

_____
Temperature, Wind and Sky Conditions at Time of Blast

Protection:_____
Mats Description and Weight

_____
Other than Mats Blast Protection

Detonator/Delay: _____
Type of Detonator Used

_____
Delay Period(s) Used

BLAST REPORT
MOUNTAIN VALLEY PIPELINE PROJECT

Page 3

Safety Measures: _____

Safety Measures Implemented to Protect Blast Area from Unauthorized Personnel

_____

Location of Measure

_____

Dates Safety Measures Placed/Removed

_____

Comments

_____

Safety Measures Implemented to Protect Blast Area from Unauthorized Personnel

_____

Location of Measure

_____

Dates Safety Measures Placed/Removed

_____

Comments

_____

Safety Measures Implemented to Protect Blast Area from Unauthorized Personnel

_____

Location of Measure

_____

Dates Safety Measures Placed/Removed

_____

Comments

_____

Safety Measures Implemented to Protect Blast Area from Unauthorized Personnel

_____

Location of Measure

_____

Dates Safety Measures Placed/Removed

_____

Comments

BLAST REPORT
MOUNTAIN VALLEY PIPELINE PROJECT
Page 4

Safety Measures:_____
Safety Measures Implemented to Protect Blast Area from Unauthorized Personnel

_____
Location of Measure

_____
Dates Safety Measures Placed/Removed

_____
Comments

_____
Safety Measures Implemented to Protect Blast Area from Unauthorized Personnel

_____
Location of Measure

_____
Dates Safety Measures Placed/Removed

_____
Comments

Communications Systems: _____
Used to Maintain Safe Blast Area

_____
Location and Use

_____
Comments

_____
Used to Maintain Safe Blast Area

_____
Location and Use

_____
Comments

_____
Used to Maintain Safe Blast Area

_____
Location and Use

_____
Comments

BLAST REPORT
MOUNTAIN VALLEY PIPELINE PROJECT

Page 5

Communications Systems:_____

Used to Maintain Safe Blast Area

_____

Location and Use

_____

Comments

_____

Used to Maintain Safe Blast Area

_____

Location and Use

_____

Comments

_____

Used to Maintain Safe Blast Area

_____

Location and Use

_____

Comments

_____

Notices of Blast:

_____

Company/Person

_____

Verbal Date Military Time

_____

Written Notice Date

_____

Written Notice Provided By

_____

Company/Person

_____

Verbal Date Military Time

_____

Written Notice Date

_____

Written Notice Provided By

BLAST REPORT
MOUNTAIN VALLEY PIPELINE PROJECT
Page 6

Notices of Blast:_____
Company/Person

_____
Verbal Date Military Time

_____
Written Notice Date

_____
Written Notice Provided By

_____
Company/Person

_____
Verbal Date Military Time

_____
Written Notice Date

_____
Written Notice Provided By

_____
Company/Person

_____
Verbal Date Military Time

_____
Written Notice Date

_____
Written Notice Provided By

_____
Company/Person

_____
Verbal Date Military Time

_____
Written Notice Date

_____
Written Notice Provided By

APPENDIX C

SEISMOGRAPH REPORT

Mountain Valley Pipeline Project

SEISMOGRAPH REPORT
MOUNTAIN VALLEY PIPELINE PROJECT

Seismograph Company:_____

Address:_____

_____

Blast Location: _____to_____ _____ _____
Pipeline Station/Milepost Pipeline Station/Milepost County/Township State

Blast Date and Time:_____
Date Military Time

Seismograph Locations:_____
Seismograph Serial Number Location Description

_____
Distance from Blast in Feet and Location Compass Direction

_____
Seismograph Reading

_____
Seismograph Serial Number Location Description

_____
Distance from Blast in Feet and Location Compass Direction

_____
Seismograph Reading

_____
Seismograph Serial Number Location Description

_____
Distance from Blast in Feet and Location Compass Direction

_____
Seismograph Reading

_____
Seismograph Serial Number Location Description

_____
Distance from Blast in Feet and Location Compass Direction

_____
Seismograph Reading

Holes per Delay:_____
Maximum Number of Holes per Delay Period of 17 Milliseconds or Greater

Person Analyzing Readings:_____
Signature of Seismograph Reader

_____
Printed Name

_____
Name of Company/Firm Analyzing Readings

The seismograph report, copy of seismograph readings, and location sketch and description documenting the location of each seismograph are to be attached to the Blast Report for each blast where seismograph readings are required.

APPENDIX D

POST-BLAST SURVEY REPORT

Mountain Valley Pipeline Project

POST-BLAST SURVEY
MOUNTAIN VALLEY PIPELINE PROJECT

STRUCTURE INFORMATION

Owner Name:	
Mailing Address:	
Telephone No.:	
Street Address or Physical Address:	
Latitude:	Longitude:
County/Township:	State:
Nearest Pipeline Station/Milepost:	
Company Structure No.:	

OCCUPANT INFORMATION

Occupant Name:
Mailing Address:
Telephone No.:

SURVEYOR'S INFORMATION

Company Conducting Survey:
Mailing Address:
Telephone No.:
Contact Person to Discuss Survey:
Name of Approved Surveyor:
State of Approval:

REQUEST FOR POST-BLAST SURVEY

Name of Company/Person Requesting Post-Blasting Survey:
Mailing Address:
Telephone No.:
Physical Address:
Statement of Damage:

STRUCTURE LOCATION MAP

Survey Map: 8 ½" x 11" copy of construction alignment sheet or site specific plan/drawing showing Mountain Valley Pipeline and structure surveyed. Attach map to survey.

SITE PLAN SKETCH

Site Plan:

8 ½" x 11" sketch showing all structures and relative locations, driveways, sidewalks, outbuildings, water wells, septic systems' components, and other man-made features as applicable. Use arrows to show site grade and slope. Include a North arrow and direction and distance to Mountain Valley Pipeline. The site plan sketch shall show the distance from the blast's end points to the adjacent natural gas pipeline(s).

Exterior Inspection

(Check all that apply)

Page 2

Age of Structure

_____years
❑ estimated
❑ provided by owner or occupant
❑ other (explain)_____

Use of Structure

❑ private dwelling
❑ commercial building
    ❑ retail
    ❑ factory
    ❑ office
    ❑ warehouse/storage
❑ multi-family dwelling
❑ single-family rental
❑ apartment building
❑ other (explain)_____

Type of Structure

❑ conventional dwelling
❑ mobile home
❑ mobile home with frame addition
❑ modular
❑ commercial (describe)_____
❑ other (explain)_____
❑ single story
❑ two story
    ❑ other (describe)_____

Frame Materials

❑ conventional wood frame
❑ timber frame
❑ steel
❑ masonry

Foundation Material

❑ poured concrete
❑ stone block
❑ cinder block
❑ concrete block
❑ other (explain)

Foundation Type

❑ crawl space
❑ full basement
❑ partial basement
❑ block on footing with center piers
❑ piers/posts/pillars with underpinning
❑ piers/posts/pillars w/out underpinning
❑ other (describe)
If dwelling is a mobile home, are tie-downs in
use? ❑ yes ❑ no

Exterior Finish Materials

❑ brick
❑ concrete block
❑ cinder block
❑ stone
❑ stucco
❑ brick or stone laminate
❑ wood siding
❑ aluminum siding
❑ vinyl siding
❑ shingle (describe type)
    ❑ other (explain)

Exterior Inspection (cont.)
(Check all that apply)
Page 3

Roofing Material(s)

❑ shingles
❑ asphalt
❑ cedar or other wood
❑ other (explain)
❑ slate
❑ tile
❑ tin or other metal
❑ tar & chip
❑ tarpaper
❑ other (explain)
Gutters installed ❑ yes ❑ no
Down spouts installed ❑ yes ❑ no
Routed away from foundation
❑ yes ❑ no

Roof Configuration

❑ sloped
❑ flat

Chimney Material
❑ block
❑ brick
❑ stone
❑ metal
❑ other (explain)

Sidewalk/Walkway Material(s)
❑ concrete
❑ wood
❑ brick
❑ pavers/patio blocks
❑ flagstone
❑ other (explain)

Driveway Material(s)
❑ concrete
❑ asphalt
❑ gravel
❑ tar & chip
❑ other (explain)

Exterior Photos Labeled to Match Checklist Items.

Comments (including a description of any substandard construction):

_____
_____
_____
_____
_____
_____

Well/Water Supply System (*check all that apply*)

Page 4

❑ Public Service Water Supply (*if not checked, complete the remainder of this page, and include a water analysis of untreated water).*

Water Use

❑ domestic
❑ irrigation domestic garden
❑ irrigation commercial crops
❑ livestock
❑ combined domestic and agricultural
❑ commercial (explain)
_____
❑ no water source at the site (explain)
_____
❑ cistern
Size _____gallons
Age _____years
Supplied by:
❑ rainwater
❑ spring
❑ runoff/stream
Location:
❑ aboveground
❑ buried
Material:
❑ concrete
❑ plastic
❑ metal
❑ other (explain)_____
❑ spring
❑ stream
❑ other (explain)

❑ dug well
depth ____ ft. age _____
❑ brick lining
❑ stone lining
❑ other (explain)
❑ Pump type & size_____
_____

❑ drilled well
❑ steel casing
❑ plastic casing
❑ other (explain)
Casing depth _____ft.
Casing diameter _____in.
Well screen/liner diameter _____ in.
Depth ____ft. to _____ft.
Well screen type_____
Vent type/size_____
Well driller _____
Pump type & size _____

Water Quantity
Has well ever gone dry ❑ yes ❑ no
Has well capacity ever been measured
❑ yes ❑ no If yes, list
data (recharge rate): _____gpm
How many people use this water supply?
_____

Water Quality
Does the water cause staining?
❑ yes ❑ no
Stain color:_____
Items stained:_____
Are there particulates (solids) in the water? ❑ yes ❑ no
If yes describe the particles (color, texture):_____
Does the water have an odor?
❑ yes ❑ no If yes describe the odor

Water Well/Septic-Sewage System

Page 5

Well/Water Supply (continued)

Is there a treatment system?
❑ yes ❑ no
Type of treatment: _____
Is the water sampling point prior to treatment? ❑ yes ❑ no

Sampling Information
May the well be unsealed to measure depth to and of water? ❑ yes ❑ no
Depth of water:_____ft.
Ground level to water: _____ft.
May the well be pumped to measure recharge characteristics? ❑ yes ❑ no
Recharge rate _____gpm
Date measured: _____
Date sampled: _____
Well sample no.: _____

Septic/Sewage Treatment System

❑ public service system
❑ aeration system
❑ package plant
❑ septic tank
❑ concrete
❑ plastic
❑ metal
❑ other (explain)_____
❑ drain field
❑ other (explain)_____

Location Information

❑ water well
❑ latitude ❑ longitude
❑ springs
❑ latitude ❑ longitude
❑ septic/sewage
❑ latitude ❑ longitude

Attach lab analysis of the pre-treatment water and any available written well documentation. Provide source of documentation. Photos of water well(s), water supply, water treatment system, and septic/sewage treatment system and area.

Interior Inspection

Provide written documentation of any defects. Written documentation must be accompanied by photos or room sketches for each interior room.

Each interior room sketch must include type of construction materials and covering for each wall, the floor and the ceiling.
Each wall that is found to be defect free must be labeled "room completely surveyed" or "no defects observed".
Show areas hidden from view (hidden by furniture, etc.).
Interior photos of a room should be appropriately labeled to match written documentation to the photo (i.e. room and wall number).
Include a key to abbreviations used.
Include a floor plan sketch with rooms labeled and indicate direction of progression of the inspection.

Comments (include any substandard construction):
_____
_____
_____

Additional Buildings

Page 6

Additional Building (attach additional sheets for each additional building).

Type of building
- ❑ barn
- ❑ garage
- ❑ well house
- ❑ storage
- ❑ other (explain)_____

Age_____
- ❑ estimated
- ❑ owner provided

Exterior finish material _____
Frame materials_____
Roof materials_____
Floor materials_____
Foundation materials_____
Is interior finished ❑ yes ❑ no
Interior finish_____

Provide written documentation and photos of exterior and interior with room sketches for
each interior room of the additional building.

Comments

Owner/resident:_____
_____
_____
_____

Surveyor:_____
_____
_____
_____

DAMAGE SUMMARY

Page 7

Damaged Facility:_____
List Facility Damaged

Type of Damage:_____
(Attach sketch of damaged facility, facility location, and photograph)

Date of Blast and Time:_____
Date (Attach copy of blast design and blast report) Military Time

Pipeline Trench Location: _____to_____ _____ _____
Pipeline Station/Milepost Pipeline Station/Milepost County/Township State

Pipeline Trench to Damage Location:_____
Distance from Blasting Site (in Feet) and Location Compass Direction

Seismograph Report:_____
(Attach Seismograph Report)

Pipeline Trench Fracture Zone:_____
Length in Feet Width in Feet

Changes Implemented Blast Design:_____
Weight of Change

_____
Distribution of Change in Blast Hole

_____
Weight of Explosive per Delay

_____
Shot Hole Pattern

_____
Supplier/Manufacturer of Explosive

_____
Explosive Grade

Ground Geology: _____
List Changes Before Blast and After Blast

DAMAGE SUMMARY

Page 8

Provide Written Comments of:

MVP Chief Blasting Inspector
Blaster
Post-Blast Surveyor
Seismologist
Facility Owner

Provide written comments of suggested changes to future blast designs for the Mountain Valley project.

Provide written comments as to actions to be taken to correct the damages.

Appendix 7:
Upland Construction Water Quality Monitoring Plan

Upland Construction
Water Quality Monitoring Plan

May 31, 2017

Table of Contents

LIST OF TABLES

LIST OF APPENDICES

LIST OF ACRONYMS AND ABBREVIATIONS

DEQ	Virginia Department of Environmental Quality
JPA	Joint Permit Application
MVP	Mountain Valley Pipeline
QA/QC	Quality Assurance and Quality Control
TMDL	Total Maximum Daily Load

Upland Construction Water Quality Monitoring Plan

1.0 Introduction

This Upland Construction Water Quality Monitoring Plan (UCWQMP) has been prepared at the Virginia Department of Environmental Quality's (DEQ) request to monitor for potential water quality impacts from the Mountain Valley Pipeline's proposed upland ground-disturbing activities. This plan is intended to generate representative monitoring data that will provide assurance that the approved erosion and sediment controls and other similar water quality control measures are effective. Monitoring locations have been identified to encompass different upland construction activities (e.g., pipeline and access road land disturbances) and different types of sensitive streams in the vicinity of the Project. The chemical and biological monitoring parameters have been selected to address impacts that generally could be associated with ground-disturbing activities.

1.1 Stream Criteria Considered for Monitoring

Pursuant to the DEQ "Request for Information for Developing and Evaluating Additional Conditions for Section 401 Water Quality Certification for Interstate Natural Gas Infrastructure Project," dated May 19, 2017, streams with the following characteristics were reviewed and considered for water quality monitoring:

1. Wild/stocked trout streams;
2. Endangered/threatened species (ETS) waters;
3. Designated public water supply streams;
4. TMDL watersheds with established TMDL's;
5. Tier 3 streams;
6. Areas near acidic soils.

There are no Tier 3 streams within proximity to the Project limits of disturbance (see Draft Environmental Impact Statement 4-90); thus, the final list of stream types considered are listed in Table 1:

Table 1: Stream Criteria
Wild/stocked Trout Streams (Trout)
Endangered/threatened species waters (ETS)
Within 5 miles upstream of a Public Water Supply[1] (PWS)
TMDL watersheds (TMDL)
Areas near acidic soils[2] (Acid)

[1] http://www.deq.virginia.gov/Programs/Water/WaterQualityInformationTMDLs/WaterQualityAssessments/2014305(b)303(d)IntegratedReport.aspx. Accessed May 2017

[2] Areas near acidic soils were defined as those where the drainage area of the pipeline right of way intersects acid forming soils and flows into a stream.

2.0 Potential Streams to be Monitored

Utilizing the criteria from Table 1 above and cross-referencing with the National Hydrological Dataset, Preliminary Draft Joint Permit Application (JPA) dated May 16, 2017, the Virginia DEQ list of Draft and Final TMDL Implementation Plans[3], and the Acid Forming Materials Mitigation Plan (prepared by Draper Aden Associates, dated May 2017), Mountain Valley Pipeline (MVP) identified streams for potential monitoring.

To meet the DEQ criteria for this UCWQMP, the limits of upland ground-disturbing activities were then assessed to locate Project areas that are in the vicinity of and upgradient from streams that meet the criteria for this analysis. To isolate potential impacts from upland activities, this plan does not include sampling locations that are immediately downstream of Project stream crossings.[4]

3.0 Recommended Monitoring Locations

The following selection criteria was developed to determine the high priority streams to be recommended for monitoring (Table 2):

- Only perennial streams (based on the flow regime provided in the JPA or the National Hydrological Dataset) were considered to ensure that flow would be present to collect data for the necessary monitoring parameters during sampling periods
- A minimum of one stream for each type of criteria was selected;
- Streams that met more than one of the criteria (e.g., were both a Trout Stream and an ETS water) were preferred;
- Streams which were listed only due to a TMDL for bacteria were not considered due to the lack of a relevant monitoring parameter (i.e., fecal coliform was not requested as a monitoring parameter).

Table 2: Recommended Monitoring Locations

Stream ID	NHD Stream Name	County	Criteria Met	Project Activity
1	Clendenin Creek	Giles	PWS Intake, Acid	Access Road
2	Sinking Creek	Giles	Trout	Access Road
3	Sinking Creek	Giles	Trout, ETS	Pipeline, Access Road, ATWS[5]
4	Sinking Creek	Giles	Trout, ETS	Pipeline, Access Road, ATWS
5	Craig Creek	Montgomery	ETS, TMDL (Sediment), Acid	Pipeline, Access Road, ATWS

[3] Available at: http://www.deq.virginia.gov/Programs/Water/WaterQualityInformationTMDLs/TMDL/TMDLImplementation/TMDLImplementationPlans.aspx Accessed May 19, 2017

[4] Potential impacts associated with stream and wetland crossings are addressed separately in MVP's draft Joint Permit Application, which will serve as preconstruction notification for coverage under Nationwide Permit 12.

[5] Additional Temporary Workspace (ATWS)

6	North Fork Roanoke	Montgomery	ETS, PWS, TMDL (Bacteria)	Pipeline, Access Road
7	Mill Creek	Roanoke	Trout, TMDL (Bacteria and Sediment)	Pipeline, Access Road, ATWS
8	Little Creek	Franklin	ETS, TMDL (Bacteria)	Pipeline, Access Road, ATWS
9	Blackwater	Franklin	ETS, PWS, TMDL (Bacteria)	Pipeline, Access Road, ATWS

Three sampling points are recommended for each sampling location for Chemical and Physical Parameters. One sample point will be upstream of the adjacent construction area, one sample point will be immediately adjacent to the construction area, and one sample point will be downstream of the adjacent construction area. Biological monitoring shall only be conducted upstream and downstream of the adjacent construction area. The purpose of the sampling is to provide assurance that the adjacent upland land disturbing activities are conducted in a manner that does not cause an impact to the nearby stream. The upstream sampling point shall serve as the baseline condition for each particular monitoring event at each sampling location.

A map depicting the recommended nine (9) stream monitoring locations is included in Appendix A. Each map depicts the suggested sampling points. During the initial pre-construction monitoring, Mountain Valley shall select an exact point appropriate to existing field conditions and shall locate them with sub-meter GPS survey equipment for future monitoring events. If allowed by the landowner, a permanent survey marker shall also be installed.

Mountain Valley will make commercially reasonable attempts to obtain access for these monitoring locations. If access is limited (i.e., biological monitoring requires at least 300 feet for each sample reach, so some landowners may not concur with that element of the monitoring), or if access is denied, the monitoring program will be adjusted accordingly after consultation with DEQ.

4.0 Monitoring Parameters

The following monitoring parameters are recommended (Table 3):

Table 3: Monitoring Parameters
Chemical Parameters
Temperature
Dissolved Oxygen
Specific conductance
pH
Turbidity (NTU's)
Physical Parameters
Photo documentation, general observations
Biological
Family-level macroinvertebrate monitoring

5.0 Monitoring Frequency

Mountain Valley will conduct monitoring of chemical and physical parameters prior to construction, during active construction, and after stabilization (i.e., seeding and mulching of the construction right-of-way). Biological parameters will be collected in accordance with DEQ requirements

6.0 Monitoring Methodology

Sampling of Chemical and Physical Parameters will be performed in-situ; collection of samples for laboratory analysis is not proposed because it is not practicable for these chemical parameters. Biological sampling will be performed in the field with laboratory analysis of the collected specimens (i.e., sample sorting and identification). The sampling parameters will be recorded as follows (Table 4):

Table 4: Sampling Methodology	
Chemical Parameters	Sampling Methodology
Temperature	*YSI 556 PRO PLUS Multi Probe System (MPS), or similar*
Dissolved Oxygen	*YSI 556 PRO PLUS Multi Probe System (MPS), or similar*
Specific conductance	*YSI 556 PRO PLUS Multi Probe System (MPS), or similar*
pH	*YSI 556 PRO PLUS Multi Probe System (MPS), or similar*
Turbidity (NTU's)	*LaMotte 2020we/wi Turbidimeter, or similar*
Physical Parameters	
Photo documentation, general observations	*GPS-enabled camera. Photos will have unique ID, date, and GPS coordinates. Photo stations will be staked in the field. General observations will also be recorded (i.e., weather, stream conditions)*
Biological Parameters	
Family-level macroinvertebrate monitoring	*EPA's Rapid Bioassessment Protocol*[6] *and A Stream Condition Index for Virginia Non-Coastal Stream*[7]

[6] Barbour, M.T., J. Gerritsen, and B.D. Snyder and J.B. Stribling. 1999. Rapid bioassessment protocols for use in streams and rivers; periphyton, benthic macroinvertebrates, and fish 2nd edition. U.S. Environmental Protection Agency, Office of Water, Washington, D.C. EPA841-b-99-002.

[7] Tetra Tech, Inc. 2003. A Stream Condition Index for Virginia Non-Coastal Streams. Tetra Tech, Inc. Owings Mills,